FITTING INSTRUCTIONS

Part Numbers: **2812060/70**

Description: **REC POINT FORGED LC70 LHS/RHS**

Suited to vehicle/s: **TOYOTA 70 SERIES LANDCRUISER 1999 ON (NOT COMPATIBLE WITH OEM BUMPER)**

WARNING

NOTE THE FOLLOWING:

- This product must be installed exactly as per these instructions using only the hardware supplied.
- In the event of damage to any recovery point component, contact your nearest authorised ARB stockist. Repairs or modifications must not be attempted.
- Do not use this product for any vehicle make or model, other than those specified by ARB.
- Do not remove labels from this recovery point.
- This product or its fixing must not be modified in any way.
- The installation of this product may require the use of specialized tools and/or techniques.
- It is recommended that this product is only installed by trained personnel.
- These instructions are correct as at the publication date. ARB Corporation Ltd. cannot be held responsible for the impact of any changes subsequently made by the vehicle manufacturer.
- During installation, it is the duty of the installer to check correct operation/clearances of all components.
- Work safely at all times.
- Unless otherwise instructed, tighten fasteners to specified torque.

ARB 4x4 ACCESSORIES

Corporate Head Office

42-44 Garden St
Kilsyth, Victoria
AUSTRALIA 3137

Tel: +61 (3) 9761 6622
Fax: +61 (3) 9761 6807

Australian enquiries sales@arb.com.au
North & South American enquiries sales@arbusa.com
Other international enquiries exports@arb.com.au

www.arb.com.au

Copyright © 2025 by ARB Corporation Limited. All rights reserved, this document must not be reproduced without the express authority of ARB Corporation Ltd

GENERAL CARE AND MAINTENANCE

By choosing an ARB Recovery Point, you have bought a product that is one of the most sought after 4WD products in the world. Your recovery point is a properly engineered, reliable, quality accessory that represents excellent value. To keep your recovery point in original condition it is important to care and maintain it following these recommendations:

As part of any pre-trip preparation, or on an annual basis, it is recommended that a thorough visual inspection of the recovery point is carried out, making sure that all bolts and other components are torqued to the correct specification. Replace any components as necessary. This service can be performed by your local authorised ARB Stockist.

REQUIRED TOOLS FOR FITMENT OF PRODUCT:

½" SOCKET SET	RING SPANNER SET
TORQUE WRENCH 9-112 Nm	MULTI-TOOL/HACKSAW

HAVE AVAILABLE THESE SAFETY ITEMS WHEN FITTING PRODUCT:

Protective eyewear		**Hearing protection**	

NOTE: 'WARNING' notes in the fitting procedure relate to OHS situations, where to avoid a potentially hazardous situation it is suggested that protective safety gear be worn or a safe work procedure be employed. If these notes and warnings are not heeded, injury may result.

FASTENER TORQUE SETTINGS:

SIZE	Torque (Nm)	Torque (lbft)
M6 – CL8.8	9	7
M10 – CL10.9	54	40
M10 F – CL11.9	60	44
M12 F – CL11.9	112	82

***Unless otherwise specified**

Copyright © 2025 by ARB Corporation Limited. All rights reserved, this document must not be reproduced without the express authority of ARB Corporation Ltd

PARTS LISTING

APPLICATION	PART NO.	QUANTITY				DESCRIPTION
		6173192 KIT	1999 TO 2011	2011 ON	2016 ON S/C 79 SERIES	
FITTING KIT INCLUDES:	4655538R/L	**1**	1	1	1	RECOVERY POINT - 70 SERIES
	211512	**1**	1	1	1	OPERATOR INSTRUCTIONS CARD
	2125484	**1**	1	1	1	RECOVERY POINT WARNING LABEL
	4584400	**4**	3	4	4	WASHER M10x30x4 HV300 ZNB480
	4581049	**2**	2	2	2	WASHER FLAT, 1/2 x 1 1/8 x 3 GOLD ZN
	4584363	**3**	3	2	2	WASHER FLAT M12 X 26 X 4 HV300 TZP480
SEE NEXT PAGE FOR MODEL SPECIFIC FITTING KITS	6151815	**2**	1	2	2	BOLT HX FL M10x1.25x40 PC11.9 480
	6151816	**2**	2	2	2	BOLT HX FL M10x1.25x60 PC11.9 480
	6151817	**1**	1	0	0	BOLT HX FL M12x1.25x40 PC11.9 480
	6151818	**1**	1	1	0	BOLT HX FL M12x1.25x150 PC11.9 480
	6151835	**1**	1	1	1	NUT NYLOC M12 x 1.25 PC10
	6250005	**1**	1	1	1	SPACER RECOVERY POINT 70 SERIES COIL SPRING

Copyright © 2025 by ARB Corporation Limited. All rights reserved, this document must not be reproduced without the express authority of ARB Corporation Ltd

VEHICLE PREPARATION

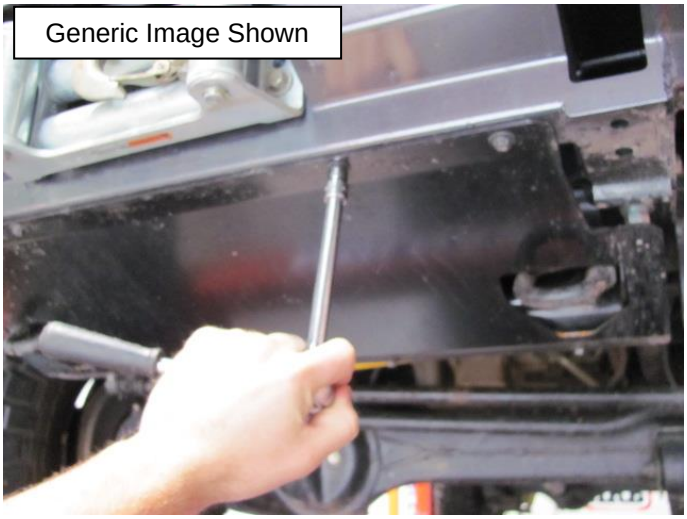

1. If fitted remove ARB stone shield. Keep all fasteners as these will be reused later.

Important Note:

Forged recovery points only fit stone shields 3512160 and 3512170. Ensure that the stone shield has four folds as shown below. If not be advised that the stone shield cannot be refitted.

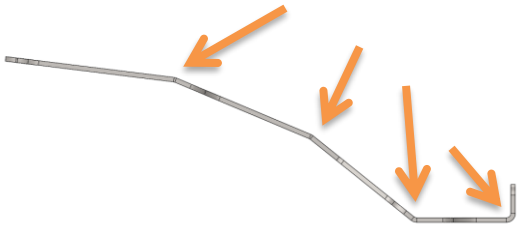

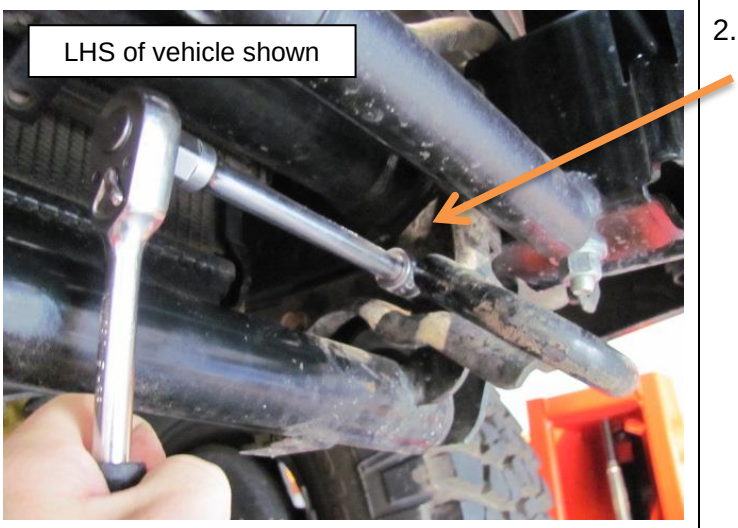

2. Remove the factory tow / tie down point if fitted to vehicle.

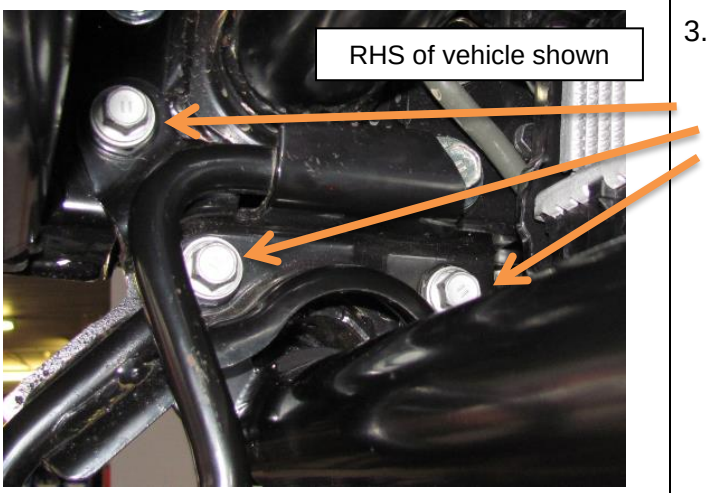

3. Remove ARB radiator protection bar *if fitted,* by removing the other factory tow point.

Copyright © 2025 by ARB Corporation Limited. All rights reserved, this document must not be reproduced without the express authority of ARB Corporation Ltd

	4. Check whether the top factory tie down point is an Ø 10 mm or Ø 12 mm bolt.
	5. Remove radiator cover bolts shown in the picture. Retain fasteners for refitment.
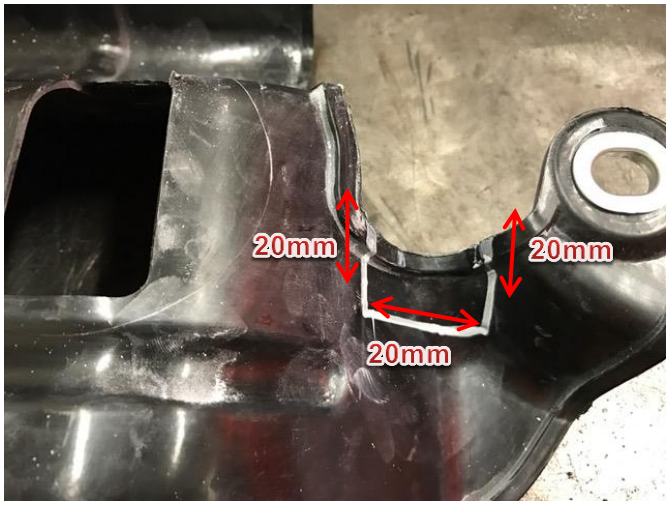	6. Trace a cut line on the radiator cover with a white marker using the picture to the left.

Copyright © 2025 by ARB Corporation Limited. All rights reserved, this document must not be reproduced without the express authority of ARB Corporation Ltd

	7. Cut the cover using the marked area as a guide with an oscillating multi-tool or a suitable cutting tool. Retain radiator cover for re-fitment.
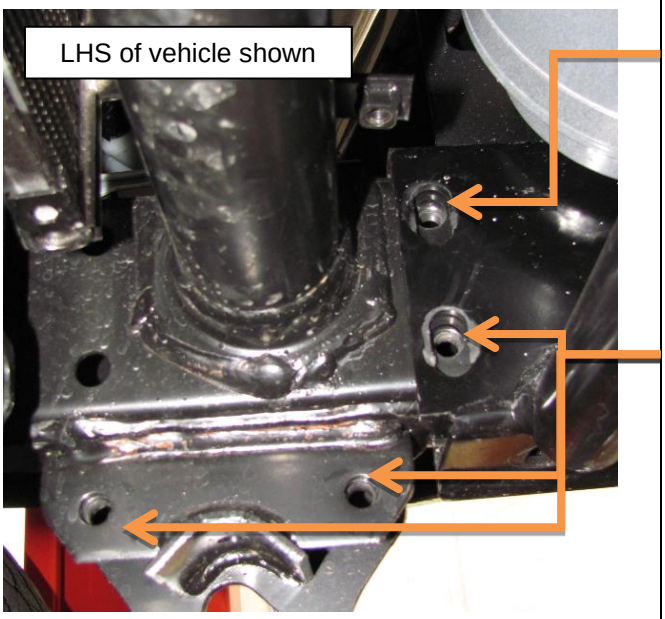	8. Remove the top in-board bull bar retaining bolts on side of chassis recovery point is to be fitted **Inspect chassis for any damage or deformation.** *The factory tie down points may have caused damage to the chassis if used for vehicle recovery.* Check the tie down captive nuts for damage or wear and check that they are all free from any foreign material. ***IMPORTANT:*** *If damage or wear is visible, consult your nearest ARB service centre for advice.*
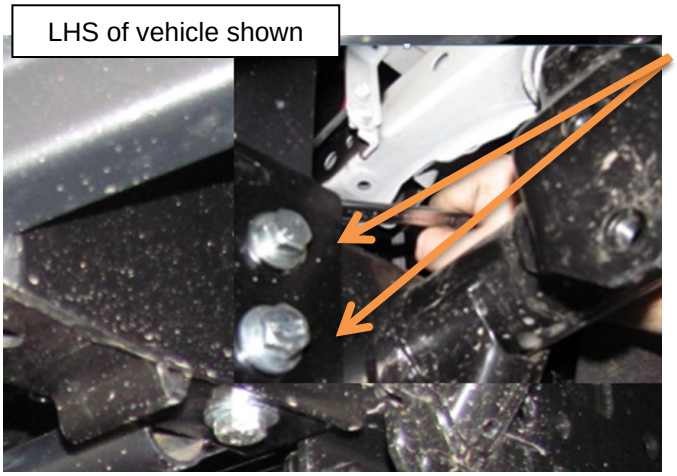	9. Loosen two remaining out-board bull bar mount bolts of side to be fitted

Copyright © 2025 by ARB Corporation Limited. All rights reserved, this document must not be reproduced without the express authority of ARB Corporation Ltd

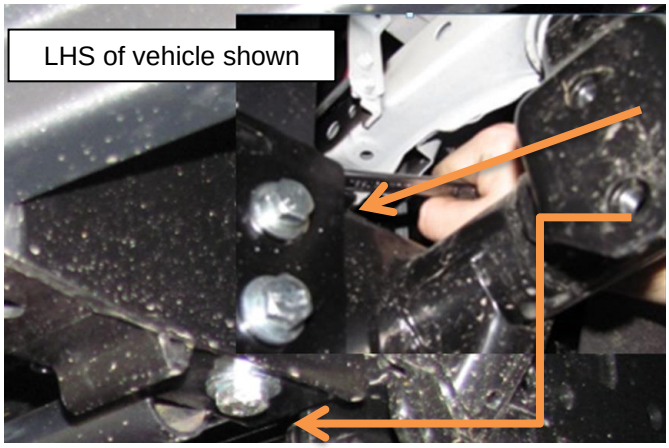

10. On the side to be fitted, hold a ring spanner on top of the vertical chassis nut, remove bolt using a socket.

Note:

Some models have the bolt inserted from above with the nut under the chassis.

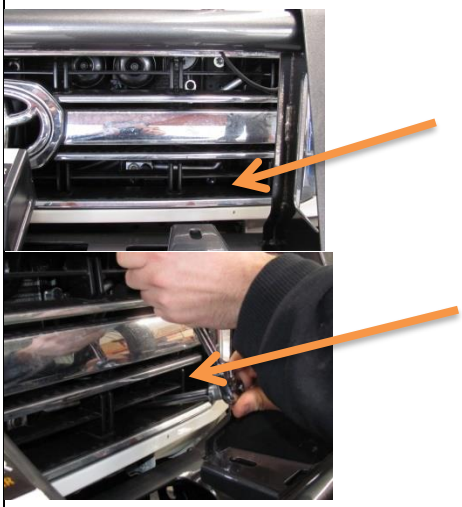

11. It may be necessary to loosen the radiator to install the rear recovery point bolt. Use a long extension bar with socket and uni-joint to loosen radiator bolt as shown. Use a ring spanner to retain nut at rear.

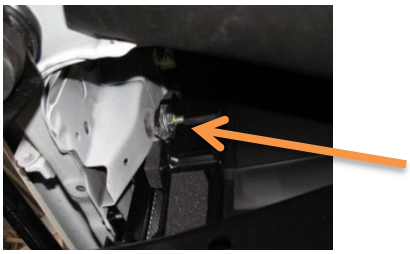

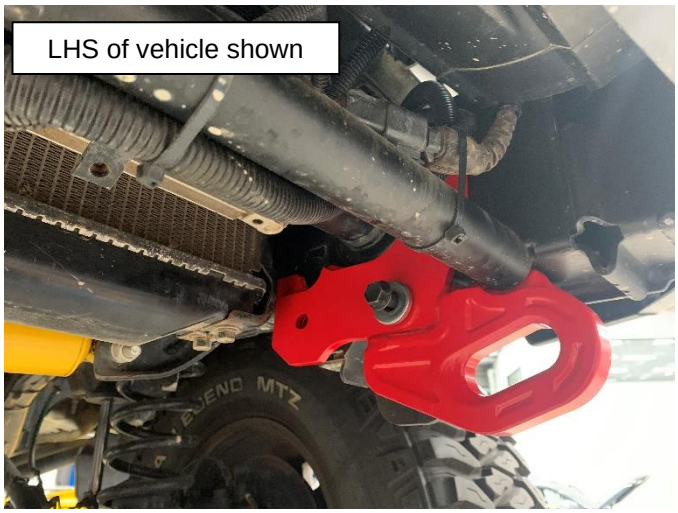

12. Place the recovery point and radiator protector crossmember (if fitting) in to position.

    Install 6250005 if an ARB radiator protection bar is **NOT** fitted to vehicle.

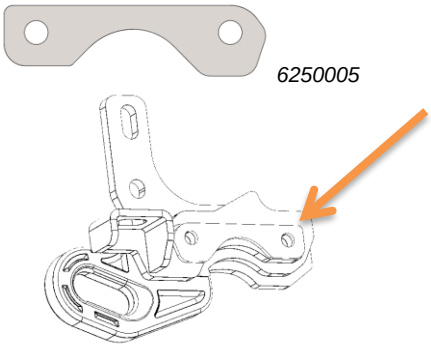

Copyright © 2025 by ARB Corporation Limited. All rights reserved, this document must not be reproduced without the express authority of ARB Corporation Ltd

13. While holding the recovery point firmly against the chassis, fasten an M10x1.25x60mm bolt & washer into each of the bottom holes *finger tight only.*

IMPORTANT:

All fasteners must be loosely fitted before any of them are torqued to their appropriate specifications.

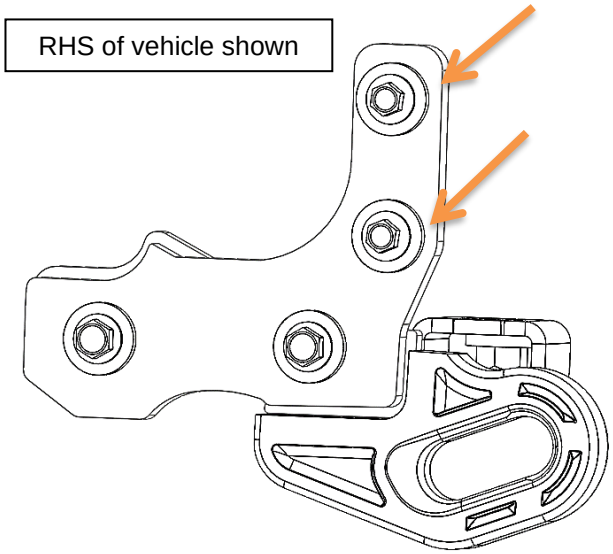

14. Fasten the correct size bolt, (see Step 4) *x* 1.25 x 40 mm bolt & washer in to the upper two holes, *finger tight only.*

15. Check gap between side bracket on recovery point and chassis / bull bar mount.
Install M12 washer(s) as required to remove any gaps.

Copyright © 2025 by ARB Corporation Limited. All rights reserved, this document must not be reproduced without the express authority of ARB Corporation Ltd

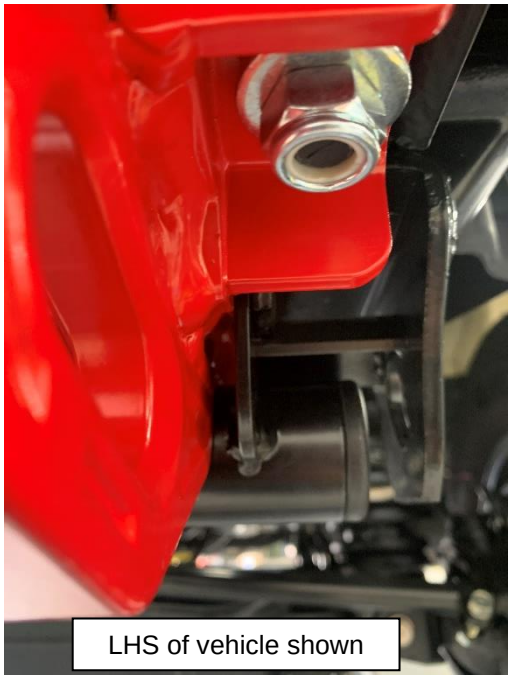

16. Ensure the recovery point is firmly against the side of the chassis.

17. For 2016ON S/C 79 SERIES models please use existing M12x1.25x170mm PC11.9 and fit the bolt from the bottom of the chassis.

    For 1999-2011 and 2011-ON models, insert M12 x 1.25 x 150 mm PC11.9 bolt & flat washer from the top of the chassis.

    Place flat washer & M12 x 1.25 Nyloc nut on bolt, do not fully tighten at this time.

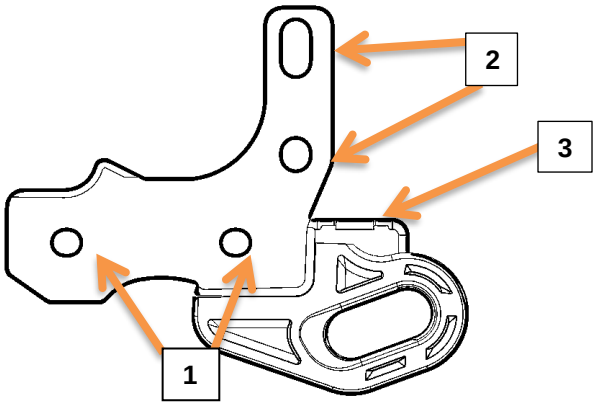

18. Torque all bolts to specification in the order shown.

    M10F PC11.9 - **60 Nm.**

    M12F PC11.9 - **112 Nm.**

19. If loosened in Step 11, tighten radiator support in reverse order.

Copyright © 2025 by ARB Corporation Limited. All rights reserved, this document must not be reproduced without the express authority of ARB Corporation Ltd

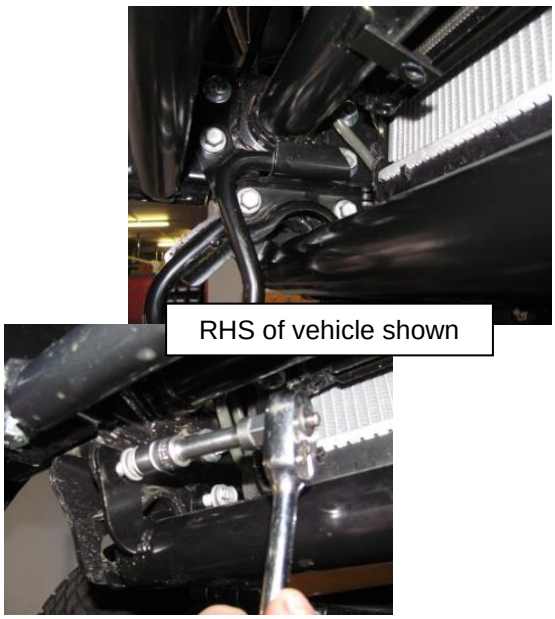

20. If removed in Step 3, replace radiator protection bar and RH factory tie down in reverse to removal.

.

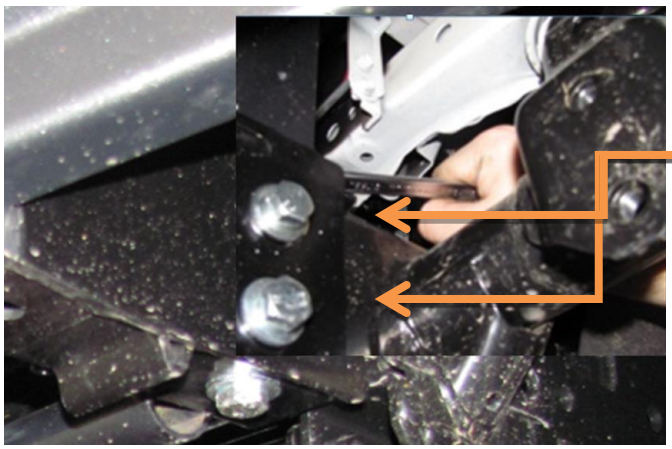

LHS of vehicle shown

21. Tighten two remaining bull bar mount bolts loosened in Step 9.

Torque to specification.

M10 PC10.9 - 54 **Nm.**

22. Refit plastic radiator cover removed in Step 5.

Copyright © 2025 by ARB Corporation Limited. All rights reserved, this document must not be reproduced without the express authority of ARB Corporation Ltd

	23. Refit stone shield to vehicle in the reverse order to removal in Step 1.
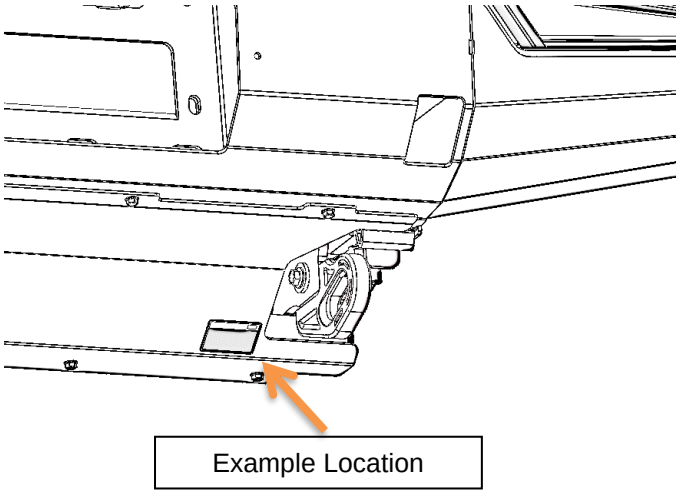	24. Affix recovery point warning label to location visible by the user.

Copyright © 2025 by ARB Corporation Limited. All rights reserved, this document must not be reproduced without the express authority of ARB Corporation Ltd

FITTED PRODUCT

Copyright © 2025 by ARB Corporation Limited. All rights reserved, this document must not be reproduced without the express authority of ARB Corporation Ltd