FITTING INSTRUCTIONS

Part Number: **3470040**

Product: **SUMMIT BULL BAR**

Suited to vehicle/s: **AMAROK 2010 -2016 FLARED**

Optional Kits:

3500590 Fog Light Kit (LH&RH Lights)
3500640 ARB AUX Fog Light Adaptor
3500530 AUX Fog Light Loom (non-factory fog lamp vehicles)
3500680 Fog Lamp Housing Clear Lens Kit
3570020 PARKING SENSOR KIT 16ON
3500720 Winch Install Kit

WARNING

REGARDING VEHICLES EQUIPPED WITH SRS AIRBAG;

When installed in accordance with these instructions, the front protection bar does not affect operation of the SRS airbag.

ALSO, NOTE THE FOLLOWING:

- This product must be installed exactly as per these instructions using only the hardware supplied.
- In the event of damage to any bull bar component, contact your nearest authorised ARB stockist. Repairs or modifications to the impact absorption system must not be attempted.
- Do not use this product for any vehicle make or model, other than those specified by ARB.
- Do not remove labels from this bull bar.
- This product or its fixing must not be modified in any way.
- The installation of this product may require the use of specialized tools and/or techniques
- It is recommended that this product is only installed by trained personnel
- These instructions are correct as at the publication date. ARB Corporation Ltd. cannot be held responsible for the impact of any changes subsequently made by the vehicle manufacturer
- During installation, it is the duty of the installer to check correct operation/clearances of all components
- Work safely at all times
- Unless otherwise instructed, tighten fasteners to specified torque

ARB 4x4 ACCESSORIES

Corporate Head Office

42-44 Garden St
Kilsyth, Victoria
AUSTRALIA 3137

Tel: +61 (3) 9761 6622
Fax: +61 (3) 9761 6807

Australian enquiries sales@arb.com.au
North & South American enquiries sales@arbusa.com
Other international enquiries exports@arb.com.au

www.arb.com.au

Copyright © 2005 by ARB Corporation Limited. All rights reserved, this document must not be reproduced without the express authority of ARB Corporation Ltd

GENERAL CARE AND MAINTENANCE

By choosing an ARB Bar, you have bought a product that is one of the most sought after 4WD products in the world. Your bar is a properly engineered, reliable, quality accessory that represents excellent value. To keep your bar in original condition it is important to care and maintain it following these recommendations:

- Prior to exposure to the weather your bar should be treated to a Carnauba based polish on all exposed surfaces. It is recommended that this is performed on a six monthly basis or following exposure to salt, mud, sand or other contaminants.
- As part of any Pre Trip Preparation, or on an annual basis, it is recommended that a thorough visual inspection of the bar is carried out, making sure that all bolts and other components are torqued to the correct specification. Also check that all wiring sheaths, connectors, and fittings are free of damage. Replace any components as necessary. This service can be performed by your local authorized ARB Stockist.

FITTING REQUIREMENTS

REQUIRED TOOLS FOR FITMENT OF PRODUCT:

Metric socket and spanner sets 8-25mm range	**External Circlip pliers**
Screwdrivers, Philips and Flat blade	**Multitool or Jigsaw with blade for plastic cutting**
Short Body Power Drill	**Metric drill set up to 10mm**
Torque Wrench (9-102Nm)	**Ø10mm Long Series Drill (for pinning holes)**
Half round file	**Marking pen**
Metric hex & torx key set	**Soft Hammer**
Wide masking tape	**Loctite© 262 or equiv.**
Small Spirit Level	**Stanley knife and scissors**
Right-angled Drill	**Tape Measure & 2 x 300mm rulers**
Angle grinder with cutting disc	**Paint black fast drying**
Insulation tape - Black	**Low tack film**
Side cutters	

HAVE AVAILABLE THESE SAFETY ITEMS WHEN FITTING PRODUCT:

Protective eyewear 	**Hearing protection** 

NOTE: 'WARNING' notes in the fitting procedure relate to OHS situations, where to avoid a potentially hazardous situation it is suggested that protective safety gear be worn or a safe work procedure be employed. If these notes and warnings are not heeded, injury may result.

FASTENER TORQUE SETTINGS:

SIZE	Torque Nm	Torque lbft
M6	9Nm	7lbft
M8	22Nm	16lbft
M10	44Nm	32lbft
M12	77Nm	57lbft

Copyright © 2005 by ARB Corporation Limited. All rights reserved, this document must not be reproduced without the express authority of ARB Corporation Ltd

PARTS LISTING			
APPLICATION.	**PART NO.**	**QTY**	**DESCRIPTION**
BULL BAR WELDED ASSEMBLY MAIN	**4654289**	**1**	**WELD ASSEMBLY MAIN BB SUMMIT AMAROK**
FIT MOUNT BRACKETS TO CHASSIS	**3750083R** **3750083L** **6151360** **6151357** **6151684** **4581050** **4581007** **4581047** **4581307** **6151428** **6151321** **6151132** **3194199** **3199944** **6151302** **4681367**	**1** **1** **4** **7** **3** **4** **4** **3** **3** **4** **4** **2** **6** **3** **3** **2**	**BRKT MNT ASSY RH SUMMIT AMAROK** **BRKT MNT ASSY LH SUMMIT AMAROK** **BOLT HEX M12x1.75x35 PC8.8 ZP** **BOLT SEMS M10x30 PC8.8 ZP** **BOLT HEX M8x1.25x30 PC8.8 BTZP480** **WASHER SPRING ½" ZP** **WASHER FLAT ½" ZP** **WASHER SPRING M8 BLACK ZP** **WASHER FLAT M8 BLACK** **NUT FLANGED M12 ZP** **NUT FLANGED M10 ZP** **NUT FLANGED M8x1.25 ZP** **PACKER 2mm** **NUTPLATE CAGE 325mm** **NUT CAGED M10** **BRACE MOUNT CHASSIS**
FIT BAR TO MOUNT BRACKETS	**6151360** **6151357** **4581050** **4581007** **6151428** **6151321**	**6** **4** **6** **6** **6** **4**	**BOLT HEX M12x1.75x35 PC8.8 ZP** **BOLT SEMS M10x30 PC8.8 ZP** **WASHER SPRING ½" ZP** **WASHER FLAT ½" ZP** **NUT FLANGED M12 ZP** **NUT FLANGED M10 ZP**
FIT BRACKET LINKS	**3750079R** **3750079L** **6151357** **6151321**	**1** **1** **6** **6**	**BRKT LINK RH SUMMIT AMAROK** **BRKT LINK LH SUMMIT AMAROK** **BOLT SEMS M10x30 PC8.8 ZP** **NUT FLANGED M10 ZP**
FIT LICENCE PLATE TO BAR	**3759488** **6151384** **6821189** **6151213** **4581287** **4581082** **6151128**	**1** **2** **2** **3** **3** **3** **3**	**BRACKET LIC PLATE SUMMIT** **SCREW 10G x 5/8 SELF TAPPING** **GROMMET RND FC** **BOLT M6x1.0x20 BLACK** **WASHER SPRING M6 BLACK** **WASHER FLAT M6 BLACK** **NUT FLANGE M6 ZP**
FIT LIGHTS & MOULDINGS	**5100260** **5100200** **3163119** **3163082** **6821287** **6821116** **3500880**	**1** **1** **4** **1** **1** **4** **1**	**BUFF KIT 2 PCE REAR NRW UPRIGHT** **BUFF KIT 2 PCE FRONT SECTION** **CAP COVERSTRAP INTERSECTION** **KIT SURROUND ARB FOGLIGHT** **LAMP LED INDICATOR CLEARANCE** **GROMMET NYLON SNAP IN TYPE** **GRILLE SPLIT PAN KIT**
FIT WINCH ACCESS PANEL (NOT FITTING WINCH)	**6523172** **6151213** **4581287** **4584295** **6151128**	**1** **3** **3** **3** **3**	**COVER WINCH PRESSED AMAROK** **BOLT M6x1.0x20 BLACK** **WASHER SPRING M6 BLACK** **WASHER FLAT M6 BLACK** **NUT FLANGE M6 ZP**

Copyright © 2005 by ARB Corporation Limited. All rights reserved, this document must not be reproduced without the express authority of ARB Corporation Ltd

FIT UNDER PANELS	**6523165** **6523166R** **6523166L** **3758097** **3194202** **6151301** **6151684** **4581307** **4581047** **6151213** **4581082** **4581287** **6151300**	**1** **1** **1** **1** **1** **7** **7** **7** **7** **18** **18** **18** **18**	**PANEL STONE TRAY** **PANEL WING RH SUMMIT AMAROK** **PANEL WING LH SUMMIT AMAROK** **BRACKET STONE TRAY MOUNT** **PLATE CAGE NUT AMAROK** **NUT CAGED M8** **BOLT M8x1.25x30 BLACK** **WASHER FLAT M8 BLACK** **WASHER SPRING M8 BLACK** **BOLT M6x1.0x20 BLACK** **WASHER FLAT M6** **WASHER SPRING M6** **NUT CAGED M6**
FIT SENSOR SUPPORT BRACKET	**3750148** **6151213** **4581287** **4581082** **6151128**	**1** **6** **6** **6** **2**	**BRACKET SENSOR SUPPORT** **BOLT M6x1.0x20 BLACK** **WASHER SPRING M6 BLACK** **WASHER FLAT M6 BLACK** **NUT FLANGE M6 ZP**
MISCELLANEOUS	**3876354** **6191037** **180302** **6151534** **665044** **6781427** **6821242** **3163091**	**1** **1** **10** **2** **1** **8** **4** **4**	**TEMPLATE BUMPER CUT 3470040** **PINCH WELD 1000mm** **CABLE TIE 4.8 x 180mm BLACK** **SCREW PLASTITE 45 # 10x16mm** **3M PRIMER STICK** **ADHESIVE STRIP BUTYL 20mm X 25mm** **CABLE TIE HOLDER 19mm X 19mm** **PLUG BLANKING BLK 17.4mm**
***PARKING SENSOR KIT 16ON PART # 3570020 (OPTIONAL)**	**665044** **6672001** **6781427** **3759843**	**1** **8** **4** **4**	**3M PRIMER 94 (AMPOULE)0.66ML|** **TAPE, 3M VHB 10X50X2.3 (THICK)** **TAPE, BUTYL 20X25 (THIN)** **BRACKET PARK SENSORS**

Copyright © 2005 by ARB Corporation Limited. All rights reserved, this document must not be reproduced without the express authority of ARB Corporation Ltd

REMOVAL OF BUMPER



1. Remove number plate and set aside for re-use later.

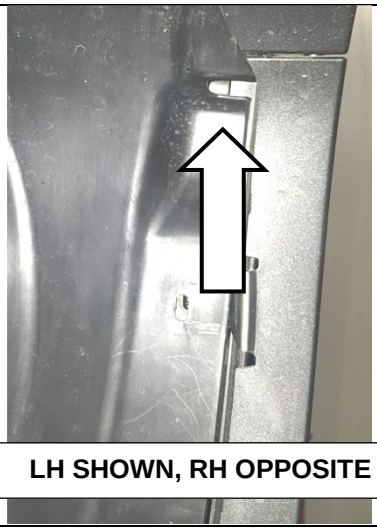

LH SHOWN, RH OPPOSITE

2. Undo screws inside wheel arch and set aside for re-use later.

   Note: *Hidden screws are located towards the top of the wheel arch.*



LH SHOWN, RH OPPOSITE

3. Undo screws located at bottom end of bumper and dispose.

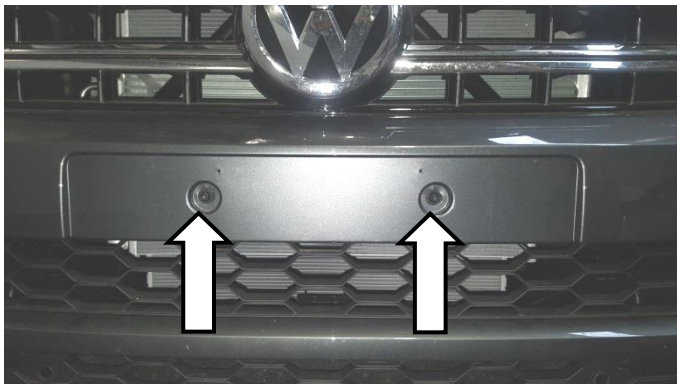

4. Undo screws behind number plate and dispose.

Copyright © 2005 by ARB Corporation Limited. All rights reserved, this document must not be reproduced without the express authority of ARB Corporation Ltd



5. Undo screws located at top of grille and set aside for re-use later.

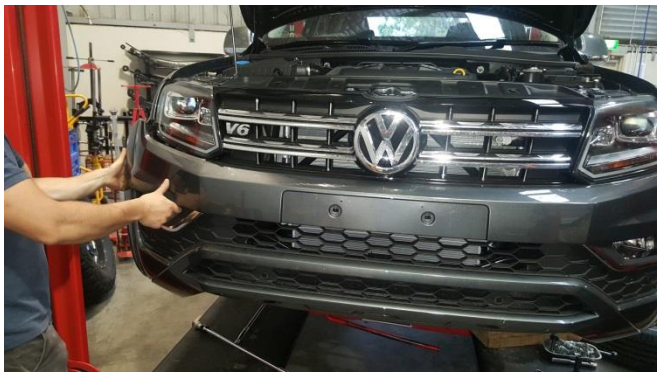

6. Remove bumper carefully.

Note: *disconnect wiring plugs relating to fog lights and parking sensors.*





PRE MY16 FACELIFT MODELS:

7. Carefully cut cable ties holding the parking sensor loom to the bumper and remove loom and sensors.

Note: *Take note of orientation of brackets and sensors as these will be reused in the bar and will have to orientate the same way.*



PRE MY16 FACELIFT MODELS:

8. Using a paint scraper or something similar carefully remove parking sensor mount bracket from bumper making sure not to damage the bracket in the process.

Note:
If Bull bar assembly is being fitted to MY16 Vehicle refer to Fitting Instruction # 3789638 inside fitting kit P/N # 3570020

Warning: Take care if using a sharp instrument for removal of bracket from bumper.

Copyright © 2005 by ARB Corporation Limited. All rights reserved, this document must not be reproduced without the express authority of ARB Corporation Ltd

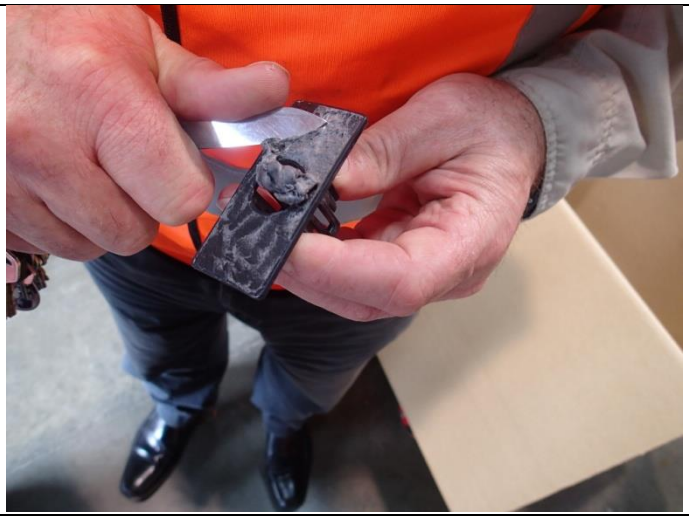

PRE MY16 FACELIFT MODELS:

9. Remove all residue from the front face of the sensor mount bracket.

Warning: Take care if using a sharp instrument for removal of adhesive residue from bracket.



MY16 FACELIFT MODELS ONWARDS:

10. Carefully cut cable ties holding the parking sensor loom to the bumper and remove loom and sensors (unplug individual sensors first) and set aside for re-use later.



11. Remove bumper reinforcing plastic and foam pad and discard.



12. Remove screws located on crash beam.

Copyright © 2005 by ARB Corporation Limited. All rights reserved, this document must not be reproduced without the express authority of ARB Corporation Ltd



13. Fit 2x M8 cage nuts to the supplied captive nut plate as shown below, then pass the cage nut assembly through the access hole in the chassis. ***LHS ONLY***





14. Place the stone tray bracket mount under the loose hardware. ***LHS ONLY***



15. On the RHS there are existing bolts which hold the factory sump guard in place loosen the bolts and place the stone tray bracket behind the factory bracket then tighten both sides of the stone tray bracket to the specified torque.

M8-22Nm

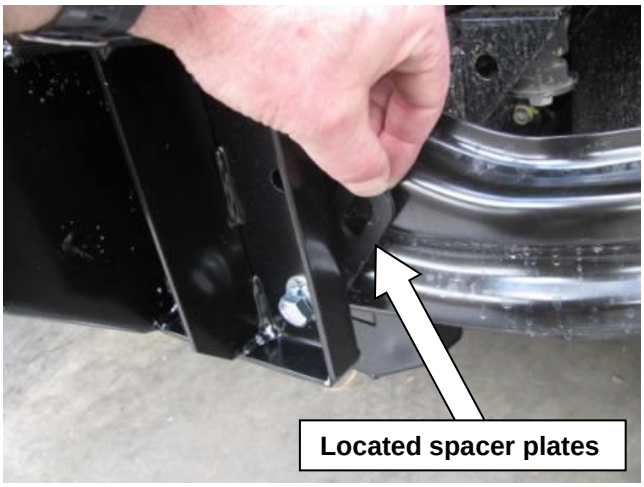

16. Fasten the bull bar mounts onto the crash beam using 4x M12 bolts, 4x M12 spring washers, 4x M12 flat washers and 4x M12 flange nuts placing one spacer on the inner side of the mount and two spacers on the outer mounting holes between crash beam and mounts. Nip up but do not tighten fully.

Note: *Use tab on spacer to assist placing them in position*

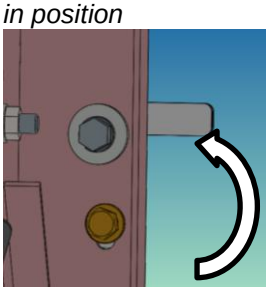

Copyright © 2005 by ARB Corporation Limited. All rights reserved, this document must not be reproduced without the express authority of ARB Corporation Ltd



ON BASE MODEL LHS FACTORY HORN CAPTIVE NUT MISSING

17. Remove bolt retaining the VW horn bracket and place bull bar mount strap brace behind the bracket and loosely secure using existing hardware.

    Note: *On base model vehicles there is no LHS horn and no factory captive nut therefore using the supplied captive nut plate fit an M10 cage nut, using the access hole in the bull bar mount at the front of the chassis rail locate the cage nut behind the hole and fix using M10 SEMS bolt.*



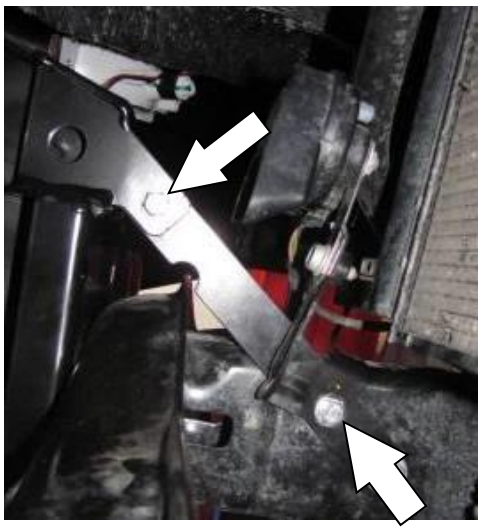

RH SHOWN, LH OPPOSITE

18. Loosely fit the bull bar mount braces to the chassis and bull bar mounts using M8 fastener sets.

WINCH FITMENT ONLY

19. Loosely fit the Bracket Links (3750079R/L) to the mounts in nominal position using 2x M10 SEMS screws and flange nuts.

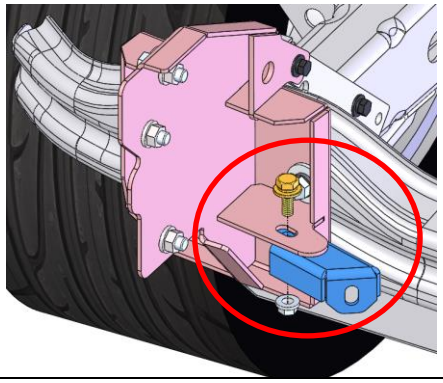

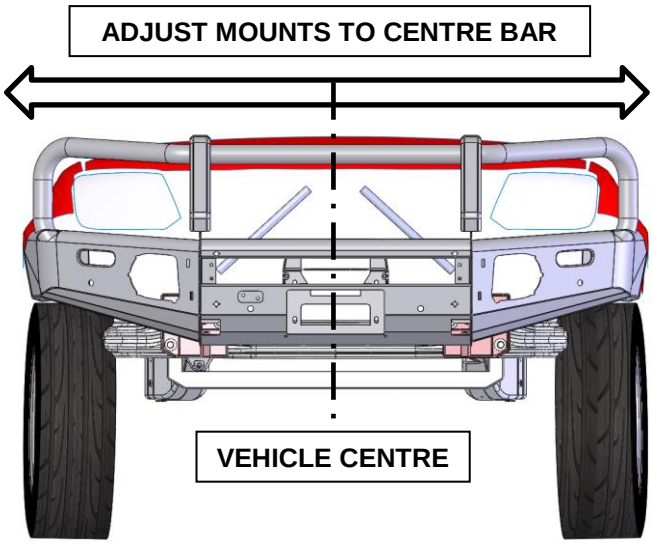

20. Trial fit the bull bar to the mounts and check left <–> right adjustment against vehicle. If biased to one side, remove bull bar and adjust mounts to centre the bull bar.

21. Carefully remove the bull bar from the mounts taking care not to move them.

    Note:
    Ensure that the 6x spacer plates are clear of the guide holes in the bumper mount before drilling the pinning holes, shown next.

Copyright © 2005 by ARB Corporation Limited. All rights reserved, this document must not be reproduced without the express authority of ARB Corporation Ltd



RH SHOWN, LH OPPOSITE

22. Drill the 4 pinning holes in the bumper (2 per side) with a Ø10mm drill bit using the holes in the bull bar mount as a guide.
23. Touch up cut edges with black spray paint
24. Fasten with 4x M10 SEMS bolt and 4x flange nuts at the newly drilled locations
25. Tighten all fasteners to specified torque.

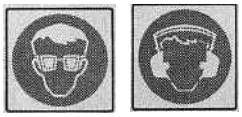

WARNING: Drilling & Cutting operations can result in flying debris. Eye and ear safety protection should be worn.

M10- 44Nm

M12-77Nm

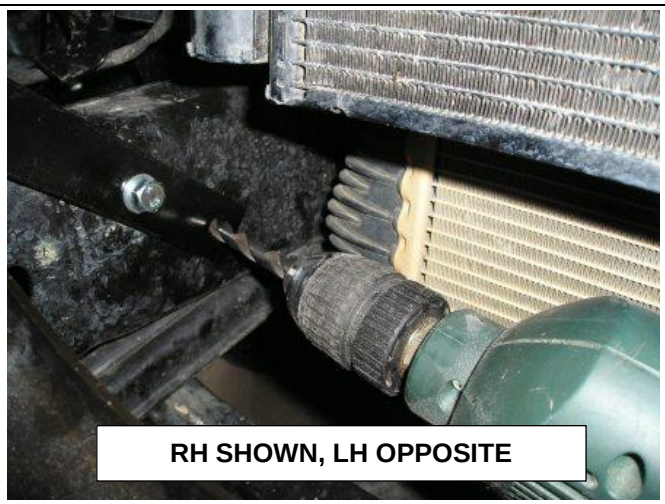

RH SHOWN, LH OPPOSITE

26. Now using the mount brace lower hole as a guide drill a Ø10 mm hole into the vehicles chassis rail on each side.
27. Touch up cut edges with black spray paint

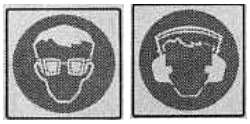

WARNING: Drilling & Cutting operations can result in flying debris. Eye and ear safety protection should be worn.



LH SHOWN, RH OPPOSITE

28. Fit 3x M10 cage nuts to 3x M10 nut plates supplied as shown below.

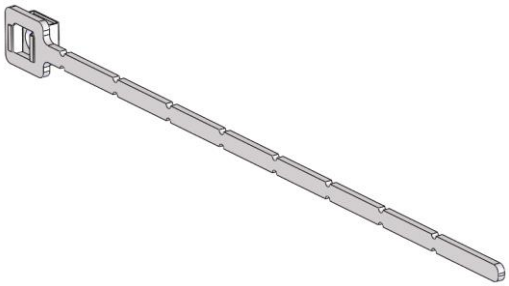

29. Feed nut plates through access hole at front of chassis rail, align with the drilled holes and fasten using 3x M10 SEMS bolts
30. Break off nut plates, position and tape ends together so as not to rattle.

M10- 44Nm

Copyright © 2005 by ARB Corporation Limited. All rights reserved, this document must not be reproduced without the express authority of ARB Corporation Ltd



RH SHOWN, LH OPPOSITE

31. Installed mount braces should appear as shown.
32. Tighten all fasteners to specified torque.

M8-22Nm

M10- 44Nm

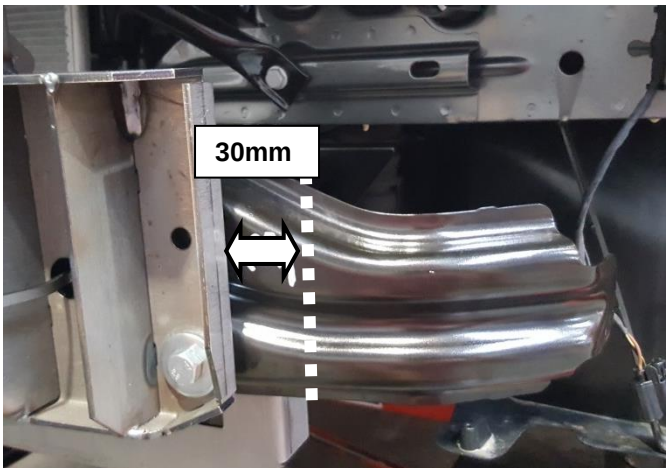

LH SHOWN, RH OPPOSITE

33. Measure 30mm outward from the outside edge of mount and mark vertical line onto crash beam.
34. Using an angle grinder fitted with a cutting disc, carefully cut along line marked and dispose of cut off pieces.
35. Deburr then touch up cut edges with black spray paint
36. Repeat for opposite side.



WARNING: Drilling & Cutting operations can result in flying debris. Eye and ear safety protection should be worn.

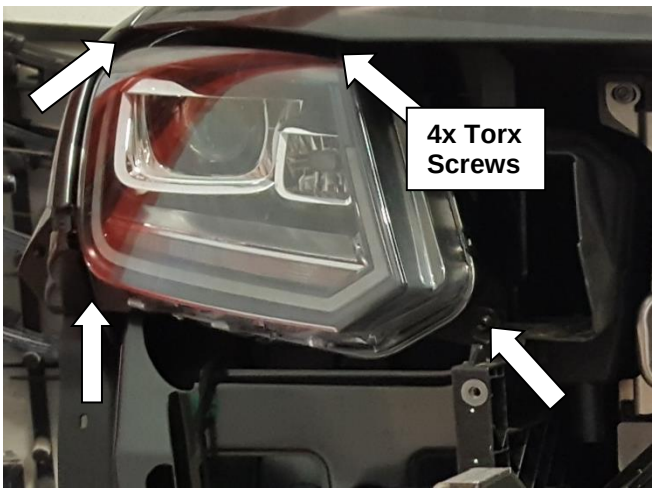

RH SHOWN, LH OPPOSITE

37. Remove the RH and LH head lamps from the vehicle by undoing the 4x Torx screws that secure the lamp to the vehicle.
38. Disconnect the 10 pin vehicle head light plugs from the rear of the head lights.

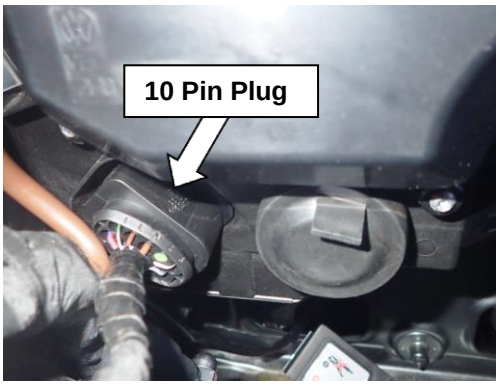

Copyright © 2005 by ARB Corporation Limited. All rights reserved, this document must not be reproduced without the express authority of ARB Corporation Ltd

MY 16 ON VEHICLE HARNESS PLUG CONNECTION

	GROUND	***INDICATOR***	***CLEARANCE V6***	***CLEARANCE 4 Cyl***
RHS	***PIN 3***	***PIN 9***	***PIN 4***	***PIN 10***
LHS	***PIN 3***	***PIN 9***	***PIN4***	***PIN 10***

Note: Wire Pin Outs may vary from model to model from 2010 On. If unsure use a test light to determine the correct wires.

39. Following fitting instructions 3789197 supplied in kit 6821287; install the LED combination lamp looms (also supplied in the same kit).

Notes:
-Use a test light or multimeter to pick the appropriate wire to attach the loom to.
-Cover each joint with either insulation tape or heat shrink tube.

LED Indicator wiring colours

Function	LED Wire
Ground	Black
Indicator	Green
Clearance	Red



40. Mask out front section of bumper using masking tape along ridge marking and side where bumper cut will be performed.

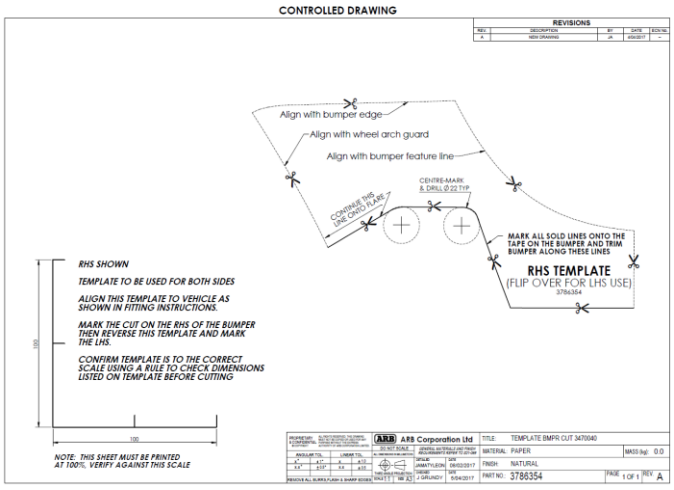

41. Using scissors carefully cut out the supplied paper template.

Note: This Template will be used for both LH and RH sides; be careful not to damage it.

CAUTION: CHECK SCALE OF TEMPLATE BEFORE USE.

Copyright © 2005 by ARB Corporation Limited. All rights reserved, this document must not be reproduced without the express authority of ARB Corporation Ltd

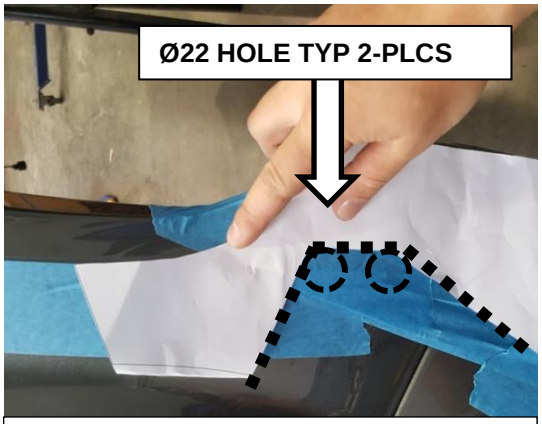

RH SHOWN, LH OPPOSITE

42. Place bumper cut template onto RH side of bumper as shown aligning with edges and features specified on bumper cut template and mark trimming lines and Ø22mm hole centres as specified.

43. Repeat for LH side.

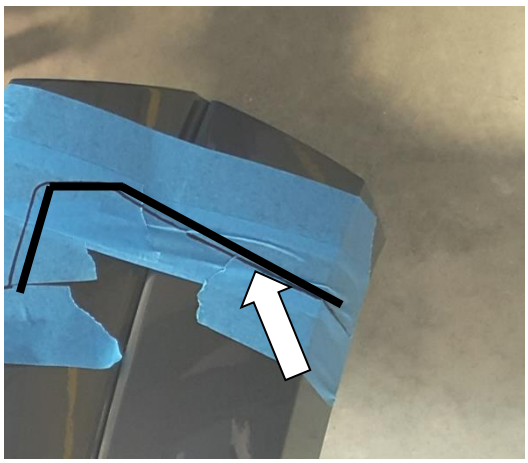

44. Continue straight line onto bumper flares on both sides.

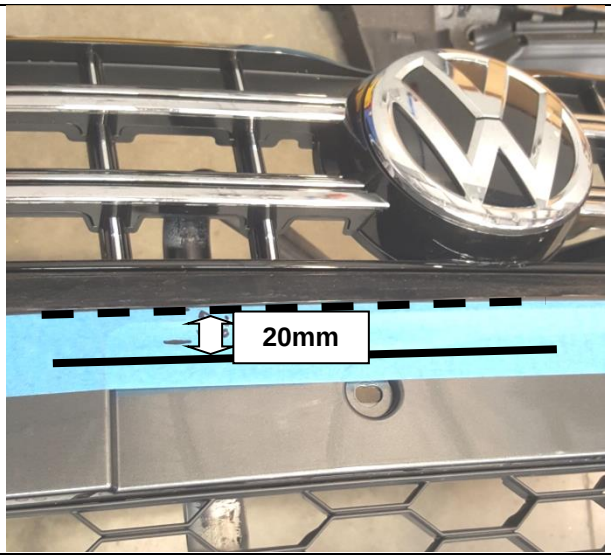

45. Mark a line on front face of bumper 20mm below ridge as shown.

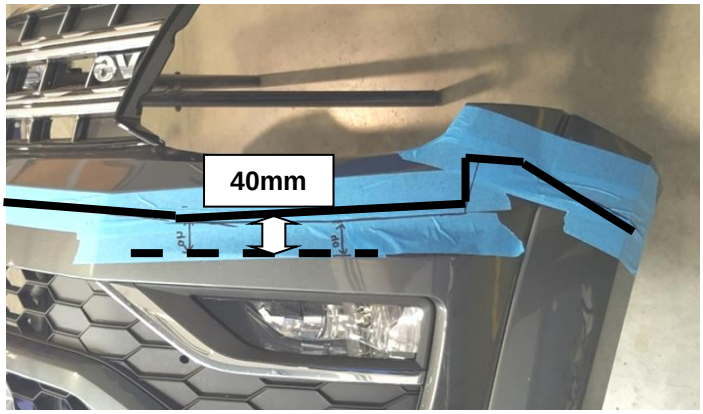

46. Mark straight line on RH side of bumper 40mm below ridge as shown until it intersects other lines marked previously.

47. Repeat for LH side.

Copyright © 2005 by ARB Corporation Limited. All rights reserved, this document must not be reproduced without the express authority of ARB Corporation Ltd



48. Drill 4x Ø22mm holes at sides then carefully cut bumper as marked using a jigsaw or similar cutting tool.

49. File down all burrs from cut edges using hand file.




WARNING: Drilling & Cutting operations can result in flying debris. Eye and ear safety protection should be worn.

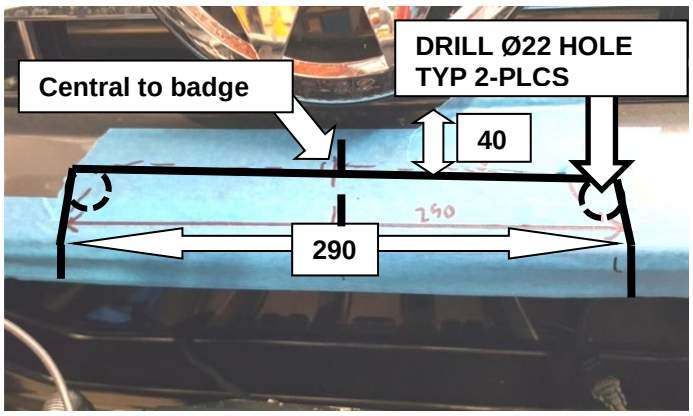

THIS STEP IS FOR BULL BARS FITTED WITH WINCH CONTROL BOX ONLY

50. Mark lines on front section of bumper as shown.

51. Drill 2x Ø22mm holes as shown.

52. Carefully cut marked section out using a jigsaw or similar cutting tool leaving R11mm at each corner of cut-out.

53. Apply pinch weld to area cut and trim off any excess length.

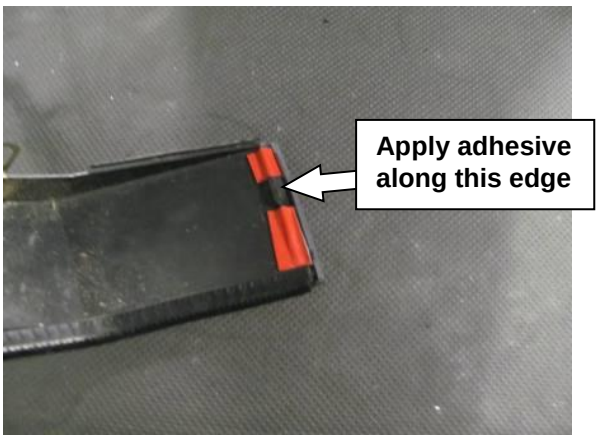

54. Re-fit bumper to vehicle and refit the cut flare back onto the bumper. To add stability apply some adhesive (Sikaflex) to the edge of the flare as shown (Clean both the flare and the bumper with wax and grease remover where the adhesive adheres too).

55. Once flare is located press firmly to ensure sufficient contact has been made, clean any excess adhesive.

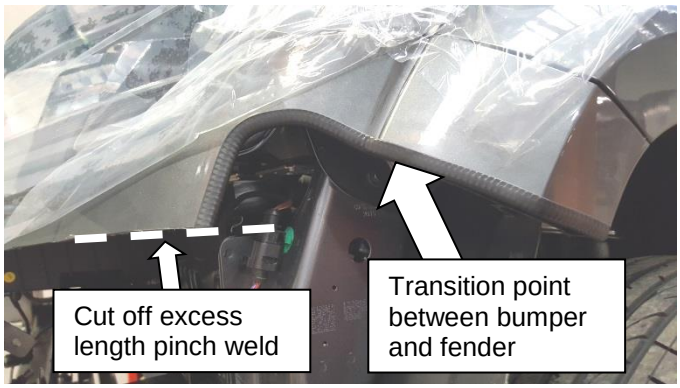

LH SHOWN, RH OPPOSITE

56. Apply pinch weld to RH & LH cut sections of the bumper and cut off any excess length.

Note: For transition point between bumper and flare, cut small 5mm section out of pinch weld on the inner side.

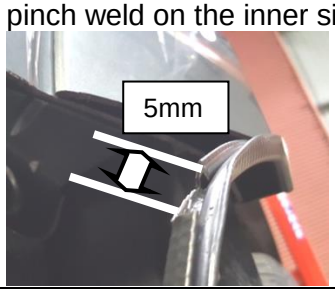

Copyright © 2005 by ARB Corporation Limited. All rights reserved, this document must not be reproduced without the express authority of ARB Corporation Ltd

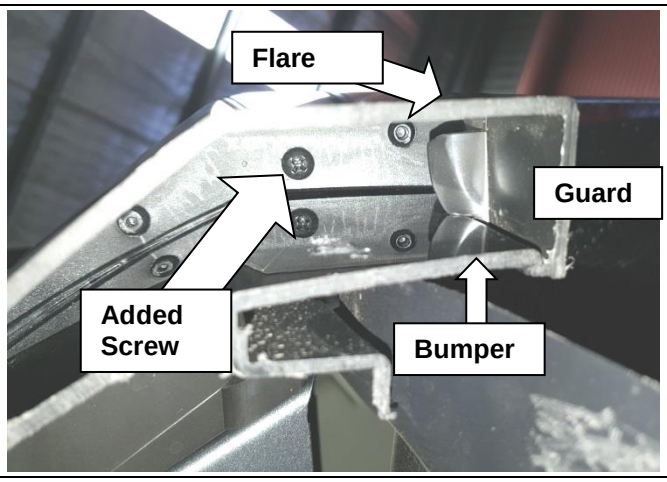

57. Looking upwards (directly underneath cut) carefully drill a 3mm hole using a 3mm drill bit through the fender and guard.

58. Repeat for opposite side

59. Fasten a Plastite 45 #10x16mm screw to fix flare to guard at the location drilled.

60. Repeat for opposite side.

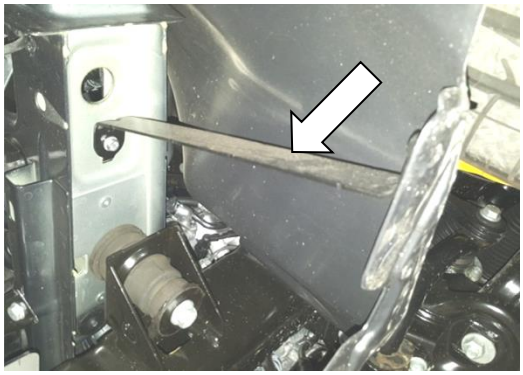

61. Remove long reinforcement brackets retaining wheel arch housings and dispose. Repeat for opposite side.



62. Fit sensor support bracket using 4x M6 fastener sets.

63. Check bracket is central to bumper.

M6 – 9Nm

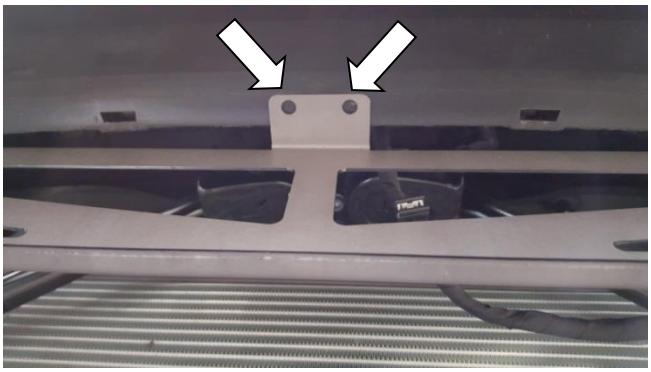

64. Drill 2x Ø6mm holes through bumper upwards using holes in bracket as guide and fasten bumper section onto bracket using M6 fastener sets.

Copyright © 2005 by ARB Corporation Limited. All rights reserved, this document must not be reproduced without the express authority of ARB Corporation Ltd



65. Secure air temperature sensor to tab on bracket as shown and secure harness to bracket using cable tie.

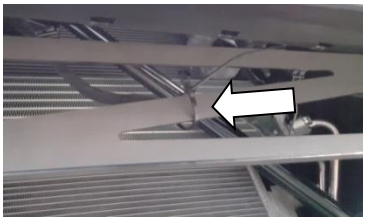

Note: If no air temp sensor is present, skip this step.

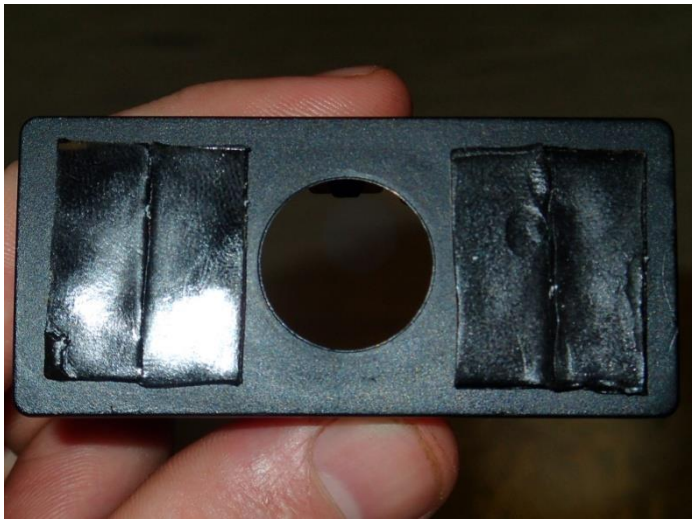

Note: *If not fitting park sensors fit blanking plugs into sensor holes and proceed to step 71.*

If fitting sensors to MY16 on vehicles refer to fitting instruction # 3789638 in the kit, then continue to step 71.If fitting to MY10 on go to 66.

DO NOT PAINT OVER SENSORS.

66. Remove protective layer from adhesive and attach to front face of sensor bracket in two places as shown.
67. Using supplied alcohol swab, clean inside face of the bar where the sensor and bracket will mount.
68. Following instructions on 3M primer pencil, activate it and apply primer to inside face of bar around sensor hole cut out where the adhesive will stick.

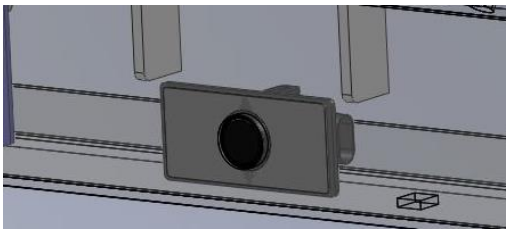

69. Place sensor in bracket. Remove outside protective layer from adhesive and carefully locate the sensor and bracket into the bar in the correct orientation.

Caution: Misalignment of sensor to hole in bull bar may cause malfunction.

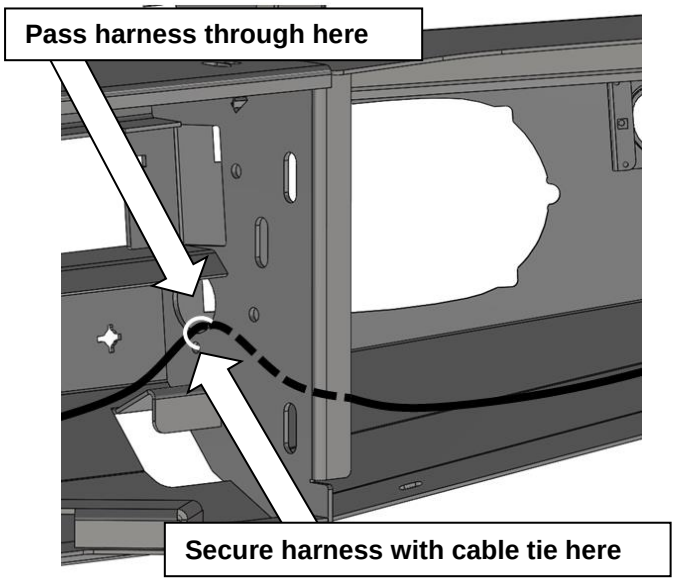

70. Fit sensor wiring harness passing it through holes in uprights, secure in place using cable ties. Using stick on cable tie holder secure loom in place on the wing and inside the lip of the lower pan.

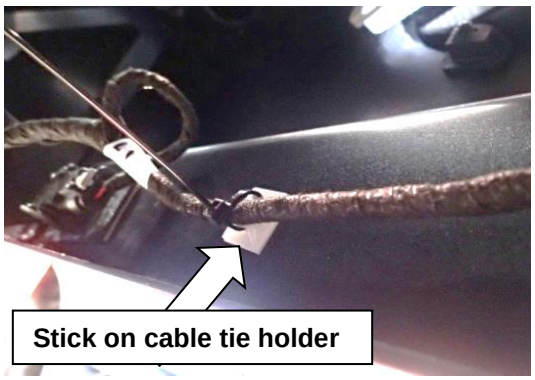

Caution: Park sensor harness must not be pulling on sensors.

Copyright © 2005 by ARB Corporation Limited. All rights reserved, this document must not be reproduced without the express authority of ARB Corporation Ltd

FITTING PROCEDURE

Note: If fitting a winch proceed using fitting instructions 3789337 supplied with 3500720 winch install kit. Once the winch is fitted please continue to step 74. If no winch is being fitted continue from step 71.

71. Slide the winch cover panel from the bottom up until it is level with the top face of the bar.
72. Fit the winch cover panel to the bar using 4 x M6 x 20 hex bolts, spring washers, flat washers and flange nuts.

Warning: Be careful not to scratch the finish of the winch cover panel.

Generic image. Bull Bar shown may not be representative of actual product.

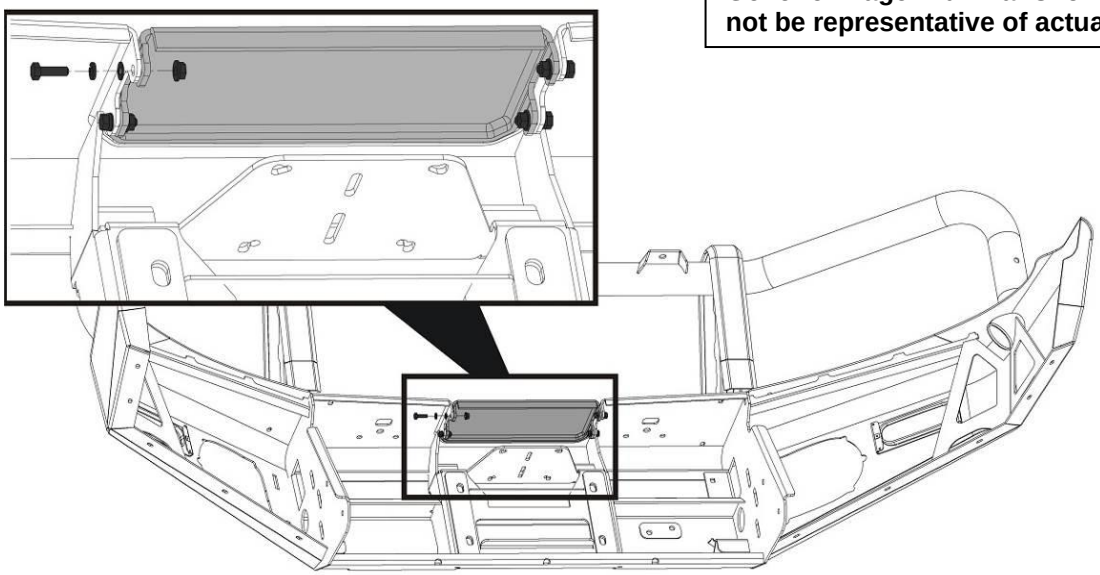

73. Fit the number plate bracket to the top face of the lower-centre pan on the bar using 3 x M6 x 20 hex bolts, spring washers, flat washers and flange nuts.

Note: If you are fitting a winch, fit the folding number plate bracket supplied in winch install kit "3500720 WINCH INSTALL KIT" – See fitting instructions 3789337

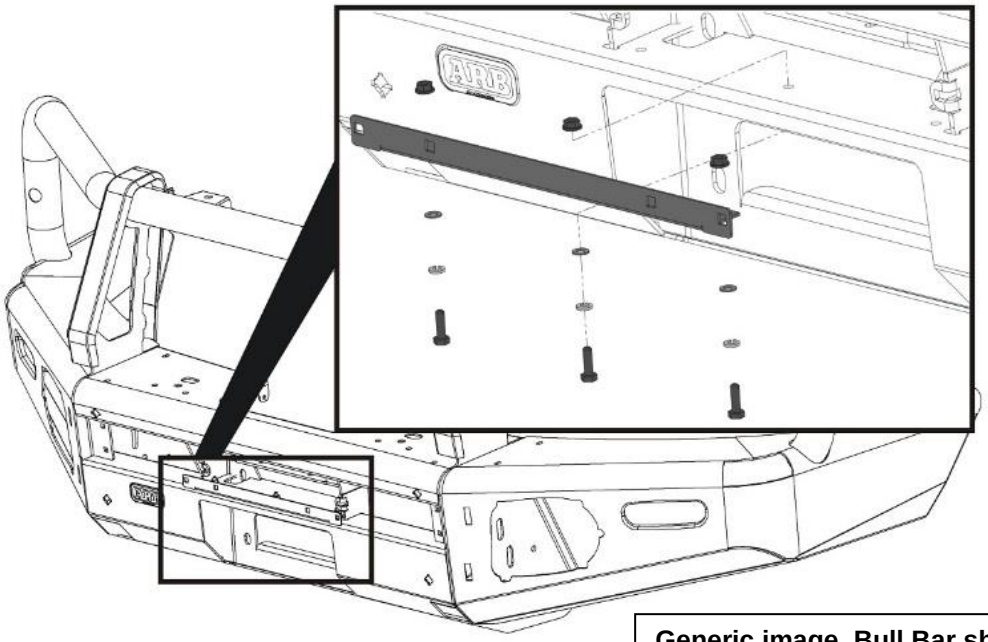

Generic image. Bull Bar shown may not be representative of actual product.

Copyright © 2005 by ARB Corporation Limited. All rights reserved, this document must not be reproduced without the express authority of ARB Corporation Ltd

Note: The following steps show the fitment of the plastic moulded parts. The mouldings are supplied in kits along with all fasteners required for fitment. It is important that the fasteners supplied with each kit are only used for the mouldings from the same kit.
The kits included in this bar kit are as follows:

74. Layout the contents of each of the following kits ensuring the contents are kept separate from each other.

Kit No.	Description
5100200	BUFF KIT 2PCE FRONT SECTION
5100210	BUFF KIT 2PCE REAR UPRIGHT BAR
3500880	SPLIT PAN MESH KIT
3163082	FOG SURROUND KIT

75. Mark the grille panel to be cut at the 810mm marks at each end on the back face.

Note: When marked, double check the measurement with a measuring tool.

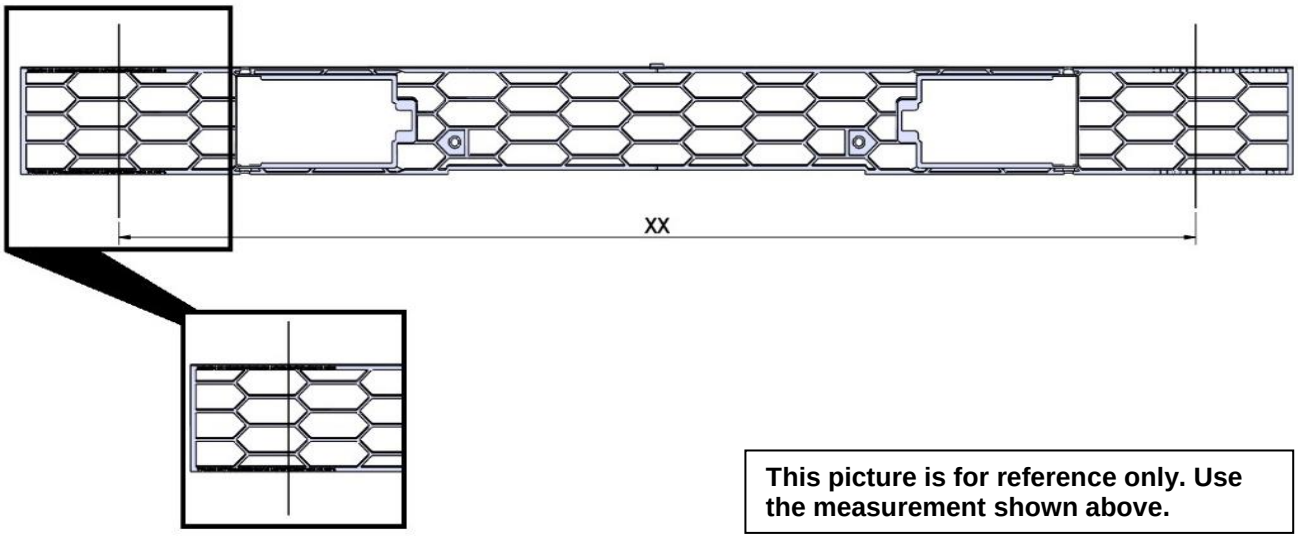

This picture is for reference only. Use the measurement shown above.

76. Use a hacksaw or similar cutting tool to carefully cut the grille panel at the positions marked in the step above.
77. Discard the off cuts and clean up the cut edges using a file or sandpaper.

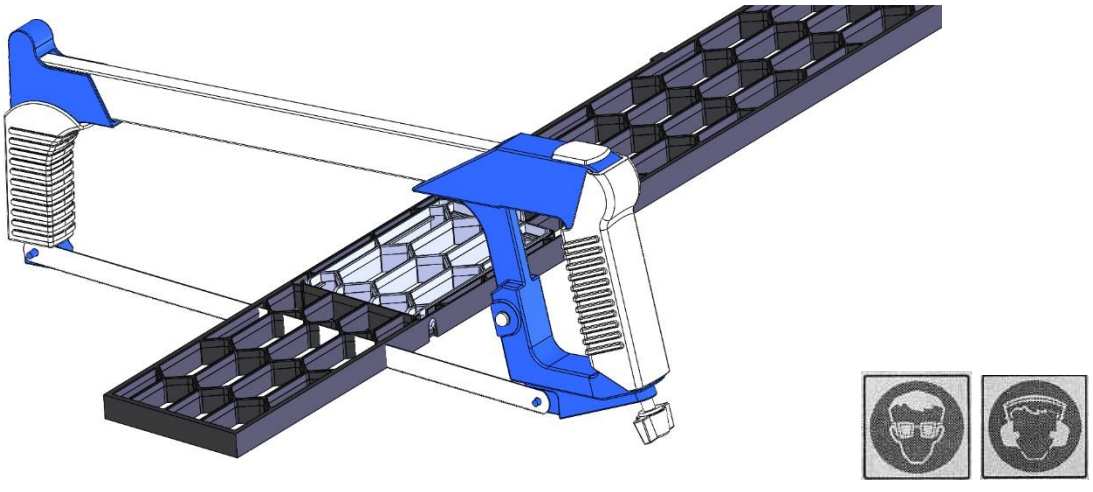

Copyright © 2005 by ARB Corporation Limited. All rights reserved, this document must not be reproduced without the express authority of ARB Corporation Ltd

78. Insert the 6 x plastic grommets into the 6 square holes in the front face of the bar.
79. Insert the grille into the bar so that the hatches open outward (facing the front of the bar).
80. Attach the grille to the centre of the bar using the short screws into the grommets fitted above.
81. Attach the ends of the grille to the bar using the longer screws, through the clamp plates into the remaining grommets.

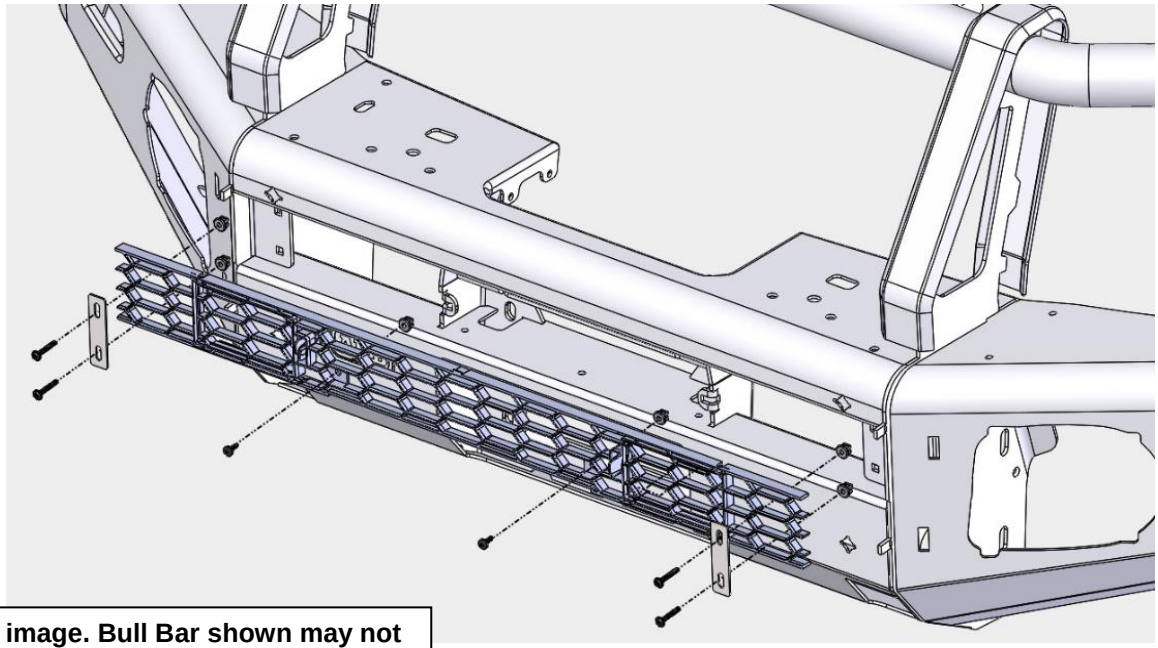

Generic image. Bull Bar shown may not be representative of actual product.

82. Fit the rubber intersection mouldings to the base of each upright cover strap.

Generic image. Bull Bar shown may not be representative of actual product.

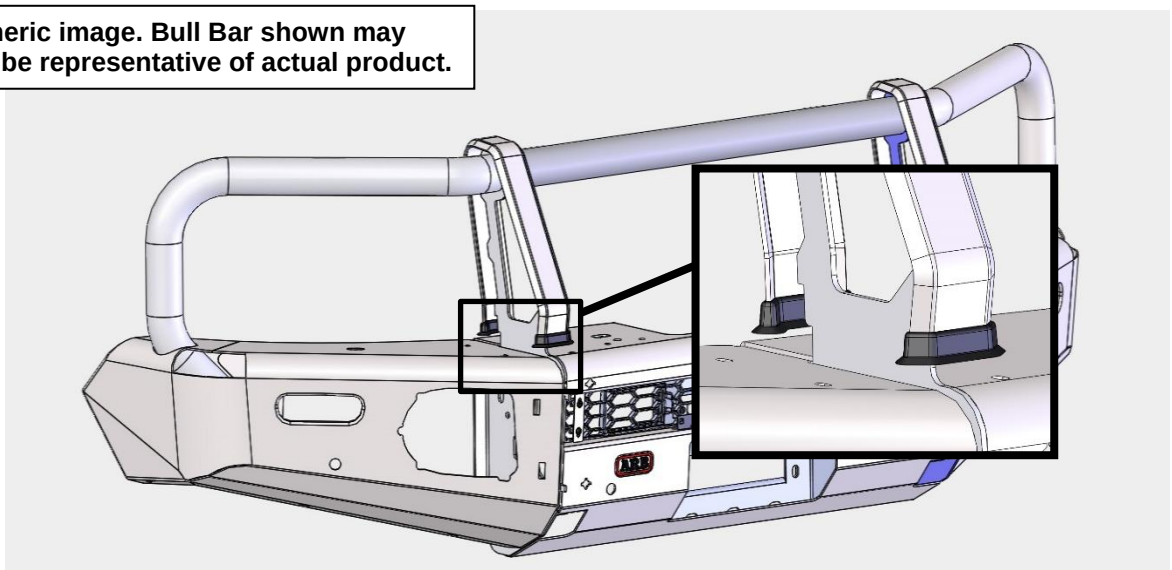

Copyright © 2005 by ARB Corporation Limited. All rights reserved, this document must not be reproduced without the express authority of ARB Corporation Ltd

83. From the rear of the bar, slide the rear buffer sections under the rubber mouldings.

Fit 4 x screws and washers. Do not tighten screws. Leave enough play in buffers for adjustment later.

Note: Ensure that the skirts of the rubber intersection mouldings are not folded back on themselves and are sitting flat against the buffers.

Generic image. Bull Bar shown may not be representative of actual product.

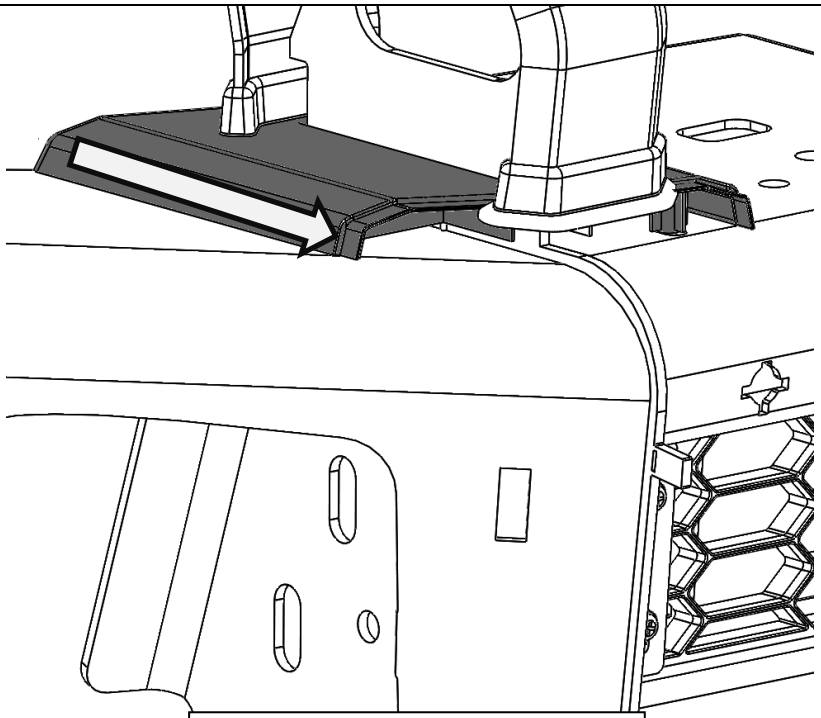

Fit washers under screw heads

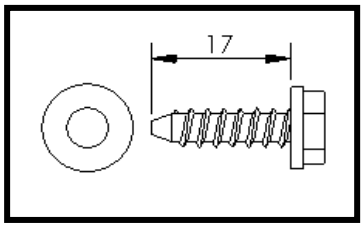

Copyright © 2005 by ARB Corporation Limited. All rights reserved, this document must not be reproduced without the express authority of ARB Corporation Ltd

84. By aligning the front buffer with the tongue of the rear buffer, attach the front buffers to the front face of the bar. Ensure each buffer sits flat against the face of bar and is keyed into the top section of the rear buffer.

Secure wing side using retaining clips.

Secure inner side using the angled cup washers, flat washers and screws.

The widest point of the cup washers goes to the top of the bar.

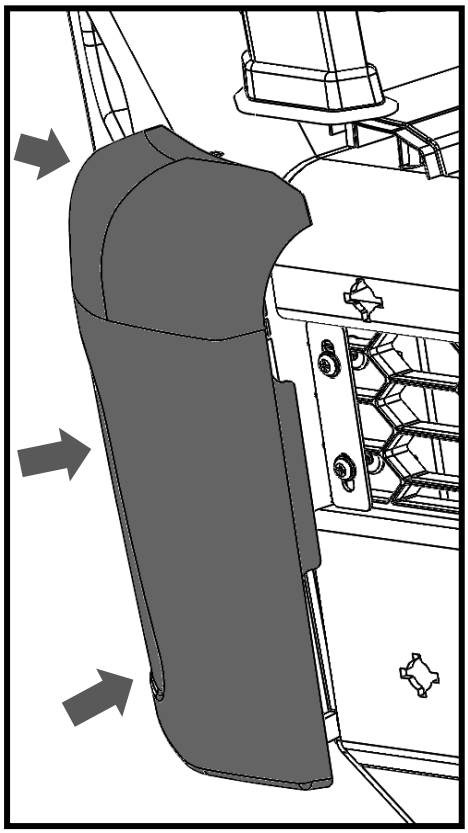

Generic image. Bull Bar shown may not be representative of actual product.

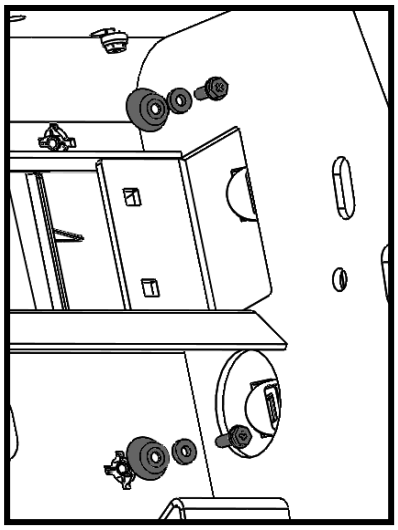

Fit washers under screw heads.

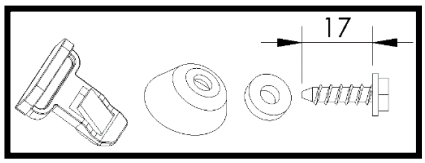

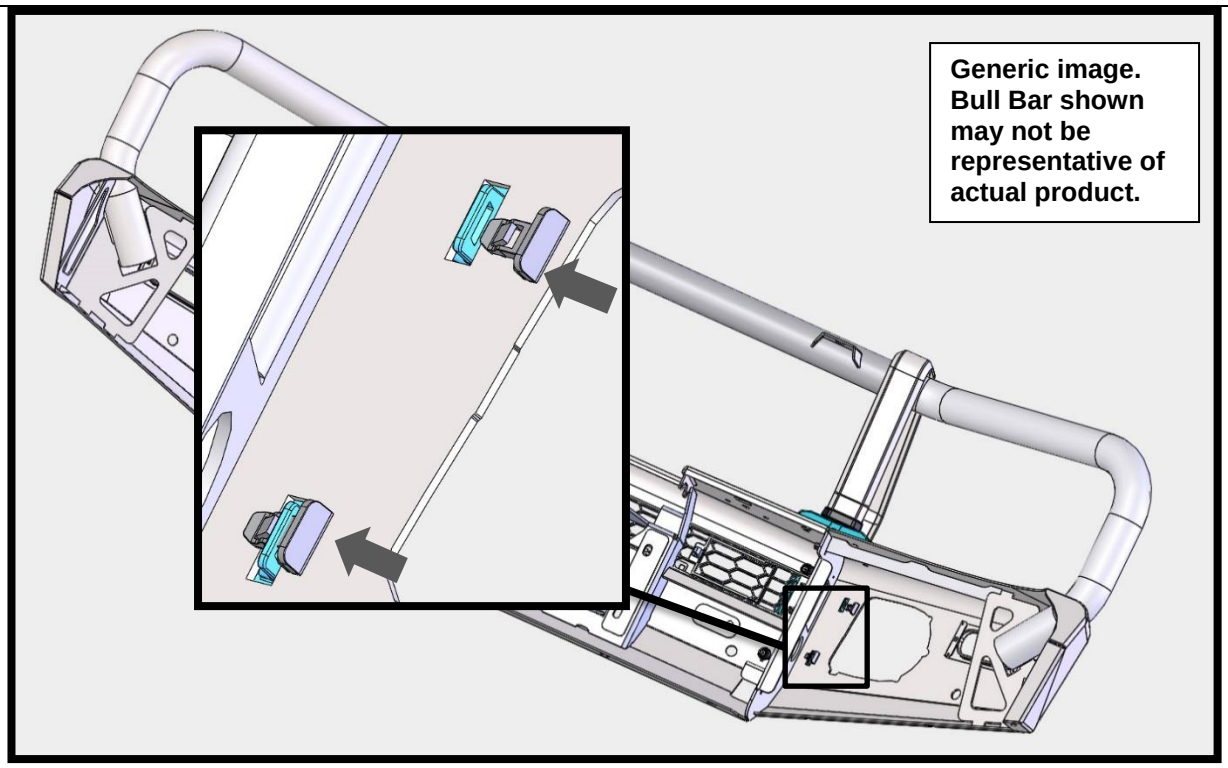

Generic image. Bull Bar shown may not be representative of actual product.

Copyright © 2005 by ARB Corporation Limited. All rights reserved, this document must not be reproduced without the express authority of ARB Corporation Ltd

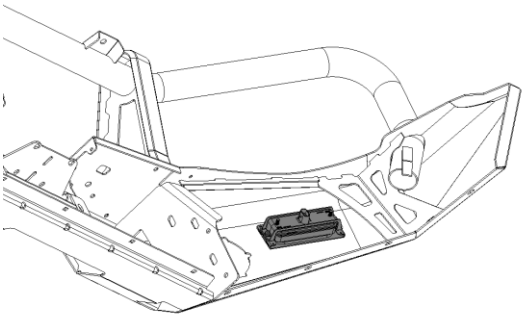

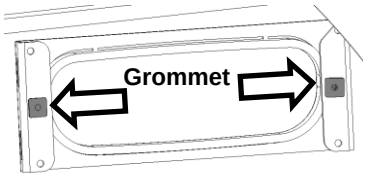

85. Fit the 4x small plastic grommets to the bar and attach the combination LED lamps to the bar using the screws provided with the lamp kit.

86. Wire the combination lamp (kit: 6821287) to the vehicles indicator and clearance lamp wiring using the screws and instructions provided with the lamp kit.

Caution: Cable tie all cables together and keep all cables clear of sharp edges and moving parts.

Wiring:
Red wire is Turn signal + (POS)
Black is – (NEG)



RH SHOWN, LH OPPOSITE

87. With the assistance of another person, loosely fasten bar to mounts using 6x M12 fastener sets (bolt, spring washer, washer and flange nut), 3 per side.

Warning: Due to the weight of the bar and winch if fitted, it is advised that you use some form of mechanical assistance when lifting the bar onto the vehicle such as an elevating trolley.



WINCH FITMENT ONLY

88. Loosely fasten the brkt links (3750079R/L) to the bull bar as shown using 2x M10 SEMS bolts and flange nuts.

Copyright © 2005 by ARB Corporation Limited. All rights reserved, this document must not be reproduced without the express authority of ARB Corporation Ltd



89. Position the bar so that it is level and there is a gap between the top face of the wings and the bottom edge of the guards of **18-22mm** and the wing tips are aligned with the edge of the wheel arch.
90. Tighten 6x M12 fasteners to the specified torque once satisfied with the position of the bar.

M12-77Nm

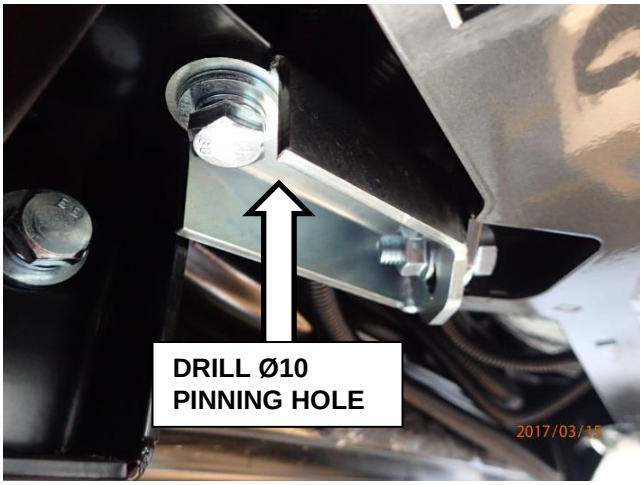

WINCH FITMENT ONLY

91. Using the holes located in the brkt links (3750079R/L) as a guide, drill a Ø10mm pinning hole into the bull bar mount.
92. Touch up cut edges with black spray paint.
93. Fasten 6x M10 SEMS bolts and flange nuts.

M10-44Nm

94. 

WARNING: Drilling & Cutting operations can result in flying debris. Eye and ear safety protection should be worn.



95. Using a long series bit, drill 4x Ø10mm pinning holes in the mount plates (access via the lamp housing opening in the wing) using the pre-cut holes in the bar uprights as a guide.

HINT: Place some masking tape or low tack film around the lamp opening in the wing to protect the bar from accidental damage during the drilling operations.

96. Touch up cut edges with black spray paint.
97. Pin the holes using 4x M10 SEMS bolts and 4x M10 flange nuts.

M10-44Nm

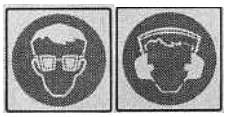

WARNING: Drilling & Cutting operations can result in flying debris. Eye and ear safety protection should be worn.

Copyright © 2005 by ARB Corporation Limited. All rights reserved, this document must not be reproduced without the express authority of ARB Corporation Ltd



RH SHOWN, LH OPPOSITE

98. Assemble and install combination light surrounds (p/n 3163082) as per instructions no. 3789190 supplied with surround kit. Note: Optional fog lamps can be installed at this point as per fitting instruction supplied with fog lamp kit no. 3500590 and the 3500530 - ARB AUX Fog Light Loom kit.

99. Connect indicator looms to combination LED Indicator/Clearance light.

100. If installing fog lights Install ARB wiring loom 3500530 and switch into vehicle. Refer to instructions supplied with loom. Place switch inside cabin in a suitable position.

    HINT: loosely fit top bracket to Fog light surround, then insert into Bull bar aperture. Fasten lower bracket, tighten all screws.

CAUTION: Cable-tie all cables together and keep all cables clear of sharp edges and all moving parts.

101. Check the operation of all lights wired during bar fitment.



RH SHOWN, LH OPPOSITE

102. Fit 7x M6 cage nuts to each of the wing underpanels as shown.



103. Fit 5x M8 cage nuts to the lower surface of the bracket stone tray mount as shown.

Copyright © 2005 by ARB Corporation Limited. All rights reserved, this document must not be reproduced without the express authority of ARB Corporation Ltd



104. Fit 4x M6 cage nuts to lower centre section of the bull bar as shown.



RH SHOWN, LH OPPOSITE

105. Loosely fasten wing underpanels to bar using M6 fastener sets.

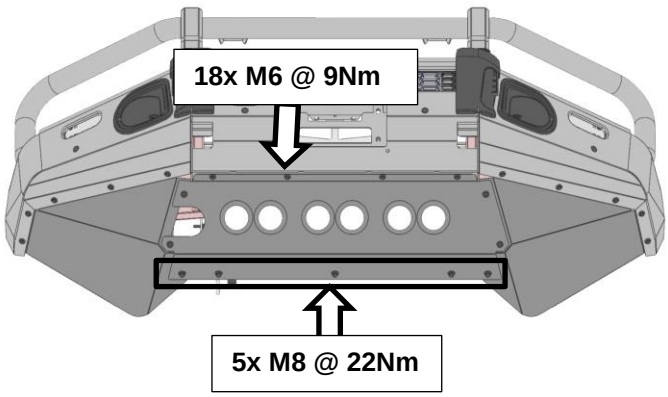

106. Loosely fasten centre panel stone tray to bar using M6 & M8 fastener sets.
107. Tighten all fasteners fixing underpanels to specified torque.

M8 – 22Nm

M6 – 9Nm

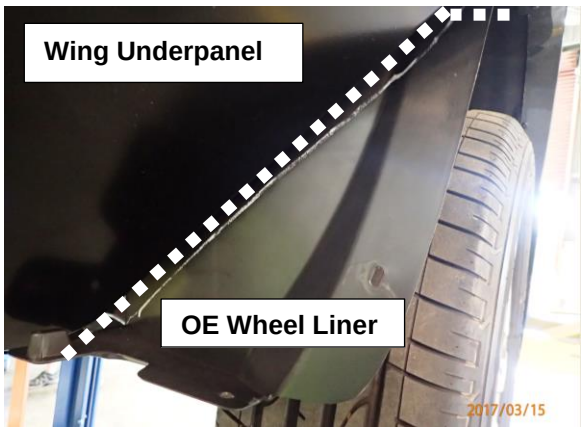

LH SHOWN, RH OPPOSITE

108. On the OE plastic wheel arch liners, mark lines from inside the bottom corner of the bar wing tip horizontally across to the wing underpanel then down along the sheet metal panel as shown.
109. Using multitool, scissors or knife, carefully cut along the marked lines and discard the lower section.

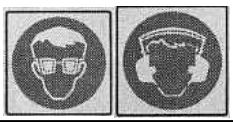

WARNING: Drilling & Cutting operations can result in flying debris. Eye and ear safety protection should be worn.

Copyright © 2005 by ARB Corporation Limited. All rights reserved, this document must not be reproduced without the express authority of ARB Corporation Ltd



RH SHOWN, LH OPPOSITE

110. Notch the OE wheel arch liners to neatly fit around the bull bar wing tip at the top as shown.
111. Tuck the remaining inner guards into the wing underpanels.



WARNING: Drilling & Cutting operations can result in flying debris. Eye and ear safety protection should be worn.



RH SHOWN, LH OPPOSITE

112. Trimmed OE liners should appear as shown at left.

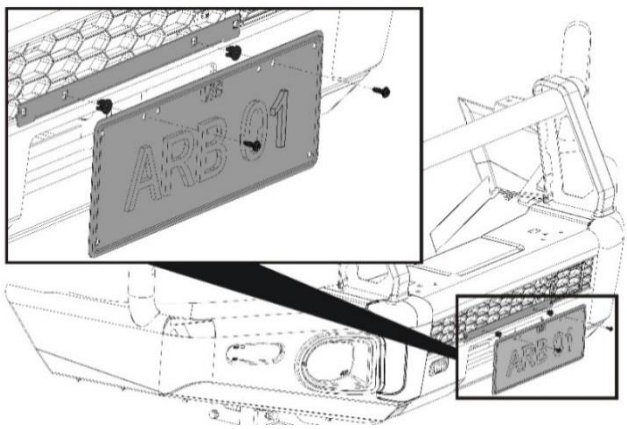

113. Fit the plastic grommets into the square holes in the licence plate bracket. Fit the number plate to the bull bar using the black self-tapping screws.
114. Discard all remaining fasteners left over.

Copyright © 2005 by ARB Corporation Limited. All rights reserved, this document must not be reproduced without the express authority of ARB Corporation Ltd

FINAL PRODUCT ON VEHICLE

ONCE BAR IS FITTED:

- **Ensure all bolts are tensioned correctly.**
- **All wiring is clear of sharp edges or moving surfaces and is secured properly.**
- **Piping is secured well clear of sharp or moving components.**
- **Check operation of winch if fitted.**
- **Check all wiring and connections to turn signal lamps, sensors, headlamp washers etc. are functioning correctly.**



Copyright © 2005 by ARB Corporation Limited. All rights reserved, this document must not be reproduced without the express authority of ARB Corporation Ltd