ARB FITTING INSTRUCTIONS

Part number/description: 3501051 – Universal coupling mount

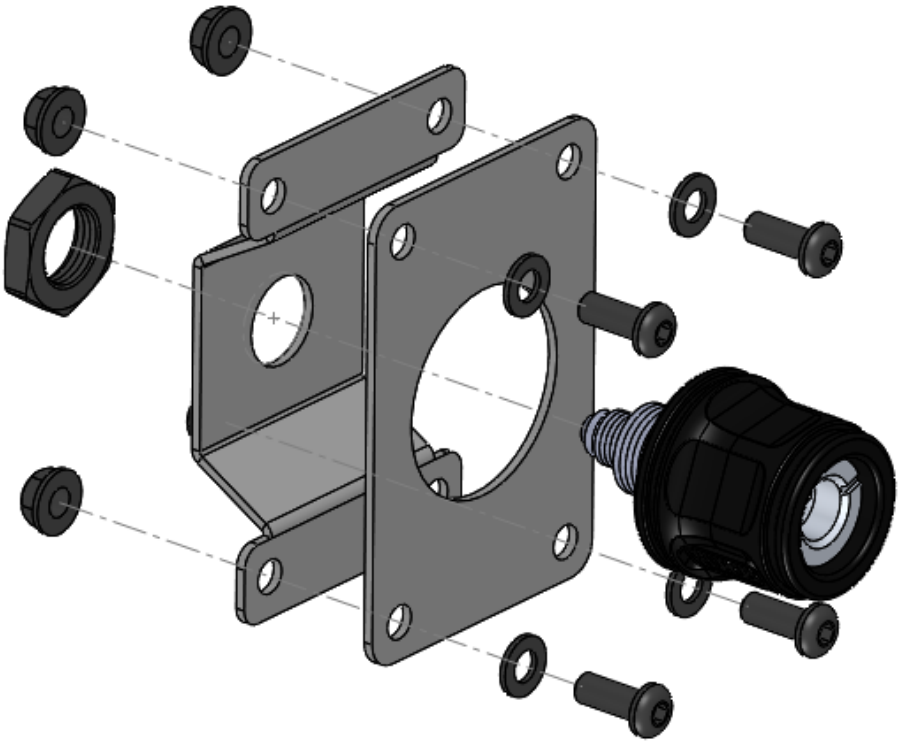

* ***Air coupling sold separately***

Kit contents:

PART NO.	DESCRIPTION	QTY
4584329	WASHER FLAT M6	4
6151173	NUT FLANGE M6	4
6151459	SCREW BUTTON HEAD M6x16	4





Warning: Drilling operations can result in flying metal debris, safety glasses should be worn.

Fitment:

- Using the front plate as a template, mark the centre of the coupling hole and the mounting holes.
- Drill the hole for the coupling using a ø 44-46mm hole saw.
- Drill ø7mm holes for the mounting hardware.
- Fit fasteners and air coupling as shown above. The front and rear plates mount either side of the interior panel.

ARB 4x4 ACCESSORIES

Corporate Head Office

42-44 Garden St
Kilsyth, Victoria
AUSTRALIA 3137

Tel: +61 (3) 9761 6622
Fax: +61 (3) 9761 6807

Australian enquiries sales@arb.com.au
North & South American enquiries sales@arbusa.com
Other international enquiries exports@arb.com.au

www.arb.com.au

Copyright © 2022 by ARB Corporation Limited. All rights reserved, this document must not be reproduced without the express authority of ARB Corporation Ltd