ARB FITTING INSTRUCTIONS

Part Number: **4421020, 4421030, 4421040**

Product Description: **FRONT RAIL / REAR STEP/STEP RETURNS**

Suited to vehicle/s: **TOYOTA LANDCRUISER PRADO 150 2009 ON ***DIESEL ONLY*****

WARNING

REGARDING VEHICLES EQUIPPED WITH SIDE AIR CURTAINS & SIDE AIRBAGS;

When installed in accordance with these instructions, the Side Step and Side Rail does not affect operation of the Side Air Curtains and Side Airbags.

ALSO, NOTE THE FOLLOWING:

- This product must be installed exactly as per these instructions using only the hardware supplied.
- In the event of damage to any Side Step and Side Rail component, contact your nearest authorised ARB stockist. Repairs or modifications to the impact absorption system must not be attempted.
- Do not use this product for any vehicle make or model, other than those specified by ARB.
- This product or its fixing must not be modified in any way.
- The installation of this product may require the use of specialized tools and/or techniques
- It is recommended that this product is only installed by trained personnel
- These instructions are correct as at the publication date. ARB Corporation Ltd. cannot be held responsible for the impact of any changes subsequently made by the vehicle manufacturer
- During installation, it is the duty of the installer to check correct operation/clearances of all components
- Work safely at all times
- Unless otherwise instructed, tighten fasteners to specified torque

ARB 4x4 ACCESSORIES

Corporate Head Office

42-44 Garden St
Kilsyth, Victoria
AUSTRALIA 3137

Tel: +61 (3) 9761 6622
Fax: +61 (3) 9761 6807

Australian enquiries sales@arb.com.au
North & South American enquiries sales@arbusa.com
Other international enquiries exports@arb.com.au

www.arb.com.au

Copyright © 2005 by ARB Corporation Limited. All rights reserved, this document must not be reproduced without the express authority of ARB Corporation Ltd

GENERAL CARE AND MAINTENANCE

By choosing an ARB Side Step and Side Rail, you have bought a product that is one of the most sought after 4WD products in the world. Your step and rail is a properly engineered, reliable, quality accessory that represents excellent value. To keep your step and rail in original condition it is important to care and maintain it following these recommendations:

- Prior to exposure to the weather your step and rail should be treated to a Canuba based polish on all exposed surfaces. It is recommended that this is performed on a six monthly basis or following exposure to salt, mud, sand or other contaminants.
- As part of any Pre Trip Preparation, or on an annual basis, it is recommended that a thorough visual inspection of the step and rail and surrounding components is carried out, making sure that all bolts are torqued to the correct specification. Also check that nearby wiring and plumbing are free of damage. Replace any components as necessary. This service can be performed by your local authorized ARB Stockist.

FITTING REQUIREMENTS

REQUIRED TOOLS FOR FITMENT OF PRODUCT:

Basic metric socket and spanners	**Silicon**
Masking tape	**Electric drill with Ø8 & Ø8.5mm drill bits**
Axle stands (optional)	**Car jack**
Rivet gun	**Runt Preventing Touch Up Paint**
Pipe Clamps	**Cut off saw**

HAVE AVAILABLE THESE SAFETY ITEMS WHEN FITTING PRODUCT:

Protective eyewear		**Hearing protection**	

NOTE: 'WARNING' notes in the fitting procedure relate to OHS situations, where to avoid a potentially hazardous situation it is suggested that protective safety gear be worn or a safe work procedure be employed. If these notes and warnings are not heeded, injury may result.

FASTENER TORQUE SETTINGS:

SIZE	Torque Nm	Torque lbft
M6	9Nm	7lbft
M8	22Nm	16lbft
M10	44Nm	32lbft
M12	77Nm	57lbft

Copyright © 2005 by ARB Corporation Limited. All rights reserved, this document must not be reproduced without the express authority of ARB Corporation Ltd

PARTS LISTING

APPLICATION.	PART NO.	QTY	DESCRIPTION
Step to chassis (4421020)	6562633R	1	Rail side step RHS
	6562633L	1	Rail side step LHS
	6151578	2	Bolt 'U' M12 x 115 x 190
	6151492	4	Nut nyloc M12
	4581049	4	Washer flat M12
	6151577	4	Bolt M10 x 1.5 x 155
	4581048	4	Washer spring M10
	4581083	8	Washer flat M10
	6151321	4	Nut Flange M10
	6151083	4	Bolt M8 x 35
	6151021	4	Bolt M8 x 20
	4581044	8	Washer flat M8
	4581046	8	Washer spring M8
	3194372	2	Plate spacer 6mm
	3194373	4	Plate spacer 8mm
	3194374	2	Plate spacer 10mm
	665051	1	Rib tape
	215637	2	Decal ARB side steps
	180302	2	Cable ties
	6151301	4	Nut caged M8
	6151303	2	Nut caged M8
	3199944	2	Plate cage nut
	6522887	1	Panel line cover
	271BLK	2	Side rail plug kit
Protection step end section (4421030)	6562637R	1	Side rail front section assembly RH
	6562637L	1	Side rail front section assembly LH
	3194365R	1	Step tread RH
	3194365L	1	Step tread LH
	6151200	16	Bolt M6 domed
	4581072	16	Washer panel ¼"
	6151162	16	Nut flange M6
	271BLK	2	Side rail plug kit
	6151021	4	Hex bolt M8 x 20 zp
	4581044	8	Washer flat M8
	6151032	4	Nut nyloc M8 zp
Front rail (4421030)	6562635R	1	Side rail front rail assembly RH
	6562635L	1	Side rail front rail assembly LH
	3194364R	1	Step tread RH
	3194364L	1	Step tread LH
	6151200	16	Bolt M6 domed
	4581072	16	Washer panel ¼"
	6151162	16	Nut flange M6
	271BLK	2	Side rail plug kit
	6151021	4	Hex bolt M8 x 20 zp
	4581044	8	Washer flat M8
	6151032	4	Nut nyloc M8 zp
	3500230	1	Side rail clamp kit
OEM lights to step (High spec vehicles only)	6151440	12	Rivet Blind 3/16
	180302	8	Cable ties

Copyright © 2005 by ARB Corporation Limited. All rights reserved, this document must not be reproduced without the express authority of ARB Corporation Ltd

FITTING PROCEDURE

1. If fitted, remove the factory side steps retaining all fasteners.

2. Refit the fasteners into the captive nuts in the vehicles body to seal against water ingress.

3. Fit the rubber plugs into the rear most ends of the side rails.

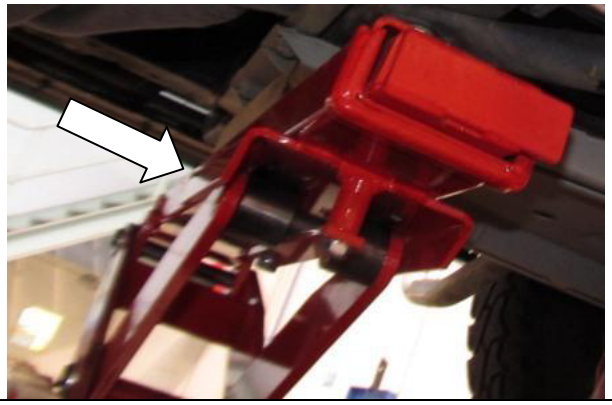

4. Place jack underneath the transmission cross-member and adjust so that the transmission is supported, as shown.

5. Starting on the right hand (RH) side of the vehicle, remove the transmission cross-member bolts as shown.

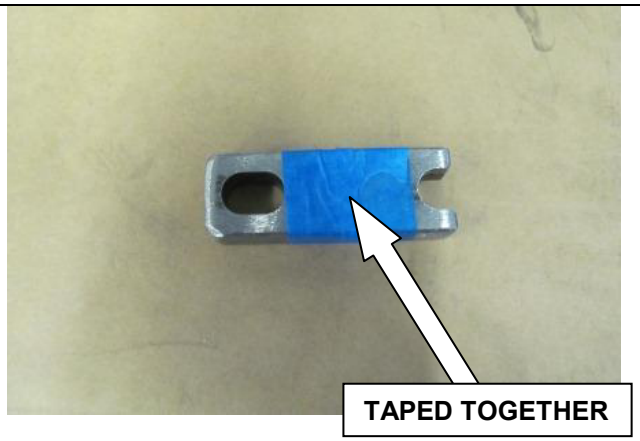

6. Now place a 10mm spacer plate and an 8mm spacer to create a 18mm spacer and tape together, do the same with an 8mm and 6mm spacer to create a 14mm spacer as shown.

Copyright © 2005 by ARB Corporation Limited. All rights reserved, this document must not be reproduced without the express authority of ARB Corporation Ltd

FITTING PROCEDURE

7. If fitted with factory side step lights remove by depressing plastic clips, and unbolting to separate plastic cover from aluminium extrusion to expose the rivets fastening the light brackets to the step, drill out the rivets.

Warning: Drilling operations can result in flying metal debris, safety glasses should be worn.

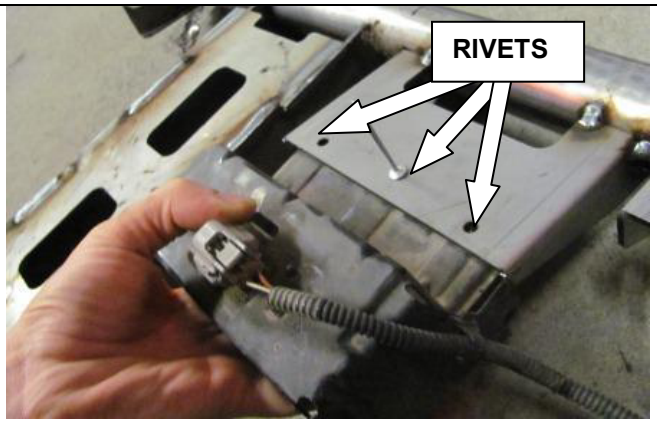

8. Rivet the factory step lights to the side step as shown

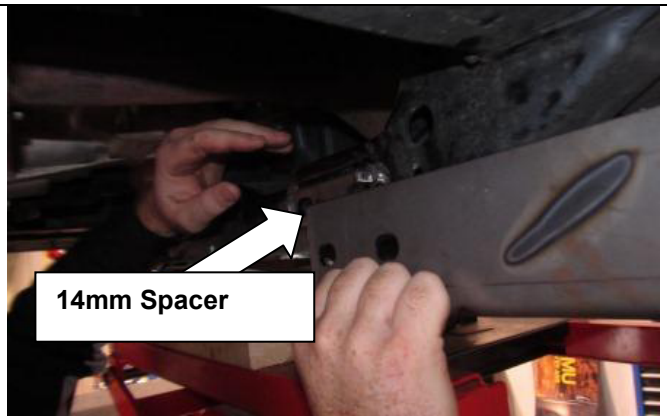

9. With the help of a friend place the RHS side step in place by sliding the front bracket over the transmission cross-member and the rear bracket mount over the hand brake line as shown. Use adjustable axle stands or a second person to hold the rails in place.

Copyright © 2005 by ARB Corporation Limited. All rights reserved, this document must not be reproduced without the express authority of ARB Corporation Ltd

FITTING PROCEDURE

10. Slide the step slightly forward and slip the spacers, with the 18mm spacer on the front of the cross member and a 14mm spacer on the rearward side of the cross member (shown in previous step).

NOTE: Ensure spacers are placed as shown with open end facing outward

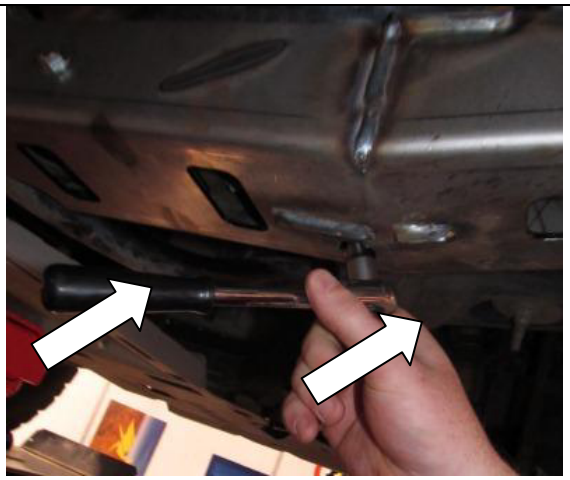

11. Loosely Fasten in placing using supplied 155mm long M10 bolts, M10 flat washers, M10 spring washers and M10 flange nuts

12. And loosely fasten through access holes in bracket as shown using M8 Bolts, spring washers and flat washers.

NOTE: If captive nuts are missing in the vehicle chassis follow steps 13-15.

13. With side step securely supported, using an Ø8.5mm drill bit and using the slots in the bracket as a guide drill the two required holes. Paint the exposed steel to prevent corrosion.

Warning: Drilling operations can result in flying metal debris, safety glasses should be worn.

14. Fit M8 cage nuts into the supplied cage nut plates. Pre-bend the nut plates into suitable profiles.

15. Now thread captive nut plates into the chassis as shown, and loosely fasten the front bracket with M8 x 35 mm bolts, M8 spring washers and M8 flat washers.

Copyright © 2005 by ARB Corporation Limited. All rights reserved, this document must not be reproduced without the express authority of ARB Corporation Ltd

FITTING PROCEDURE

16. Now thread an M12 'U' bolt over the chassis coincident with the rear mount bracket and loosely fix using M12 Nyloc nuts and flat washers.

17. Now level the step and tighten all fasteners to their specified torque;

- **M8-22Nm**
- **M10-44Nm**
- **M12 U bolt-44Nm**

NOTE: Steps 18-24 are LHS specific all other steps are the same as for the RHS.

18. For the LHS apply the ribbed tape to the rear of the M12 U bolt and cable tie as shown. Trim tape to suit.

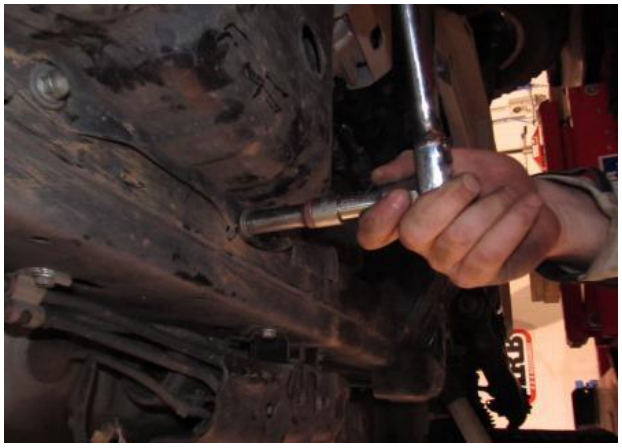

19. For the LHS if applicable in order to thread U bolt over chassis remove the fuel tank cover, and unclip the lines on top of the chassis.

20. On the LHS remove the fuel line cover on the front transmission cross member.

Copyright © 2005 by ARB Corporation Limited. All rights reserved, this document must not be reproduced without the express authority of ARB Corporation Ltd

FITTING PROCEDURE

21. Attach the rear of the rail to the chassis using a U bolt, M12 flat washers and M12 Nyloc nuts. Leave loose at this stage.

NOTE: On the passenger hand side on higher spec vehicles there may be brake lines on top of the chassis rail, if so ensure the U bolt is placed under the lines and slightly adjust the lines to give clearance to the U bolt.

22. Adjust the rail so that it is level with the vehicle and tighten all fasteners to the above specified torque.

- **M8-22Nm**
- **M10-44Nm**
- **M12 U bolt-44Nm**

NOTE: M12 U bolt to be torqued to 44Nm

23. For the LHS side step Place 4 x M8 cage nut into the step, as shown below.

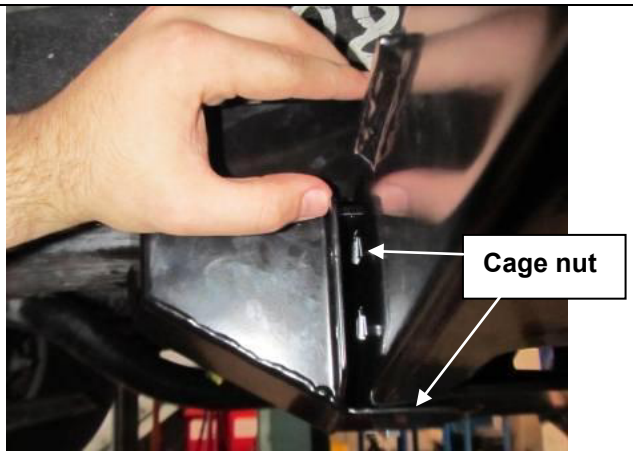

24. When the LHS step is fitted place cover over the fuel lines and fasten using M8 hardware, as shown

25. If applicable plug the step light loom back to vehicle and cable tie loom to vehicle chassis on both RHS and LHS.

Copyright © 2005 by ARB Corporation Limited. All rights reserved, this document must not be reproduced without the express authority of ARB Corporation Ltd

FITTING PROCEDURE

NOTE: IF FITTING CURVED END SECTIONS PROCEED TO STEP 37. IF FITTING FRONT RAILS CONTINUE FROM HERE.

FITTING FRONT SIDE RAILS 4421040.

26. To protect the paint / powder coating on the bull bar, place masking tape on the vertical section of the outer frames.

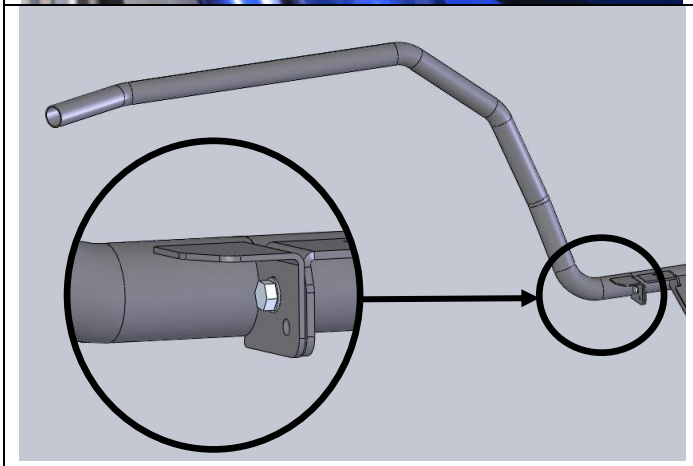

27. Verify the fit of the side rails by checking the RH side first.

28. Place the end section assembly onto the end of the side rail rear section as shown, check gap to outer frame on bull bar, there should be approximately 6mm gap,

29. Now check the LHS

30. If the gap is correct fit rubber bung and refit to rear rail connection point then attach using an M8 bolt, 2 x M8 washers and an M8 nyloc nut.

NOTE: For Oct 2013 on Facelift vehicles with deluxe bars you may have to cut approximately 30mm off the end of the rail. Touch up with rust preventative paint before refitting, step 30.

Leave loose at this stage.

Copyright © 2005 by ARB Corporation Limited. All rights reserved, this document must not be reproduced without the express authority of ARB Corporation Ltd

FITTING PROCEDURE

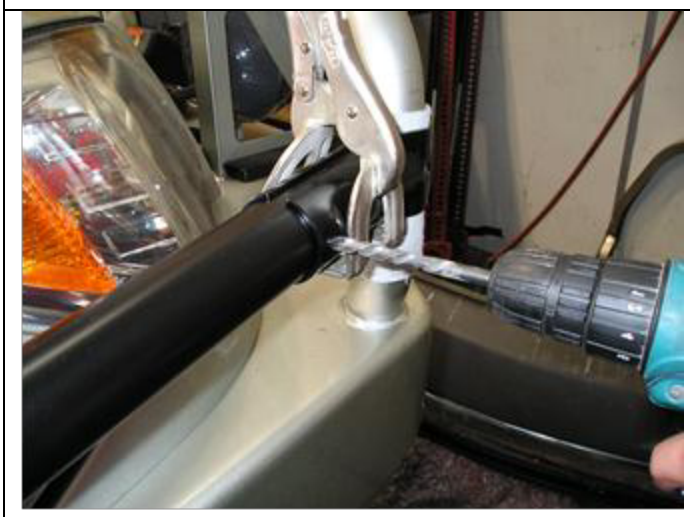

31. Fit the front rail to the bull bar using the side rail clamps provided. Align rail so that it runs parallel to bull bar wing (approximately 90 to 100mm from underside of rail to top face of wing). Ensure there is a minimum 20mm clearance between the side rail and the body.

NOTE: USE A CLAMP SUCH AS A G-CLAMP OR VICE GRIPS TO HOLD THE SIDE RAIL CLAMP IN PLACE.

32. Using the holes in the clamp as a guide, drill 8.5mm holes through the front rails and bull bar outer frame.

33. Remove the masking tape and bolt the side rail in place with M8 x 70mm dome head bolts, black M8 flat washers and black M8 nyloc nuts.

M8-22Nm

34. Repeat steps 19-24 on the LH side

Warning: Drilling operations can result in flying metal debris, safety glasses should be worn.

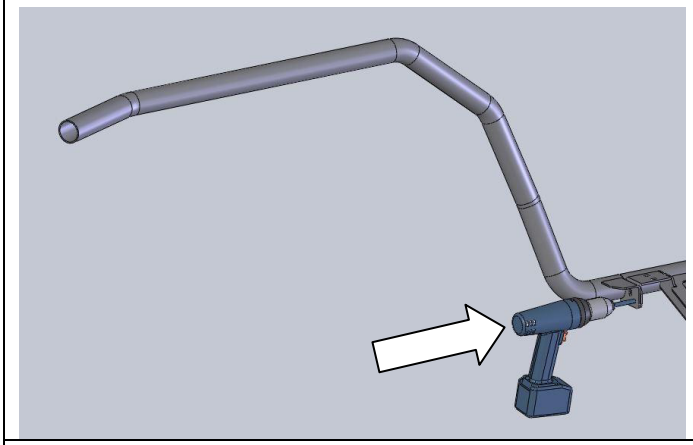

35. Using an electric drill with an Ø8mm drill bit and the pre-cut hole in the front side rail as a guide, drill through the rear section.

36. Apply paint or a rust preventative to the bare metal.

Warning: Drilling operations can result in flying metal debris, safety glasses should be worn.

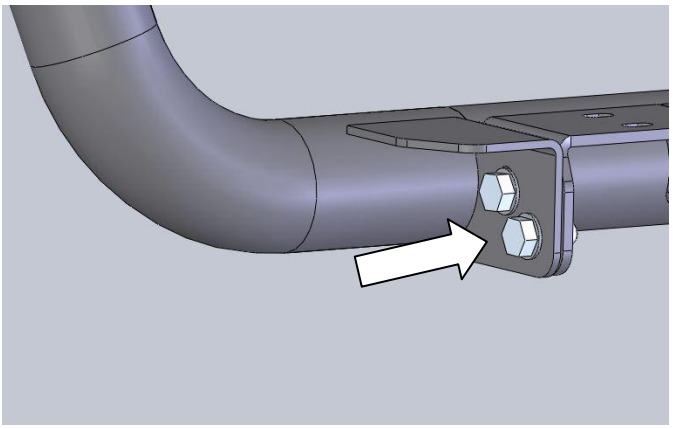

37. Pin the front side rail to the rear section using an M8 bolt, 2 x M8 washers and an M8 nyloc nut and tighten to the specified torque.

M8-22Nm

38. Repeat on the LH side.

Copyright © 2005 by ARB Corporation Limited. All rights reserved, this document must not be reproduced without the express authority of ARB Corporation Ltd

FITTING PROCEDURE

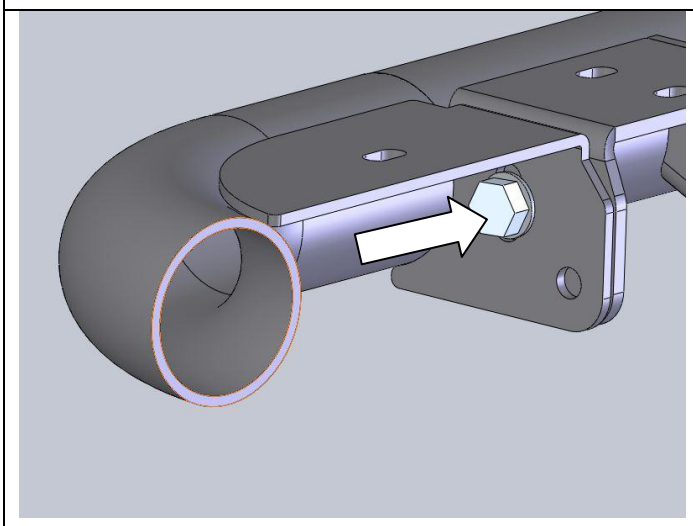

FITTING CURVED END SECTIONS 4421030

39. On the RH side fit the curved end section onto the side rail as shown and attach using an M8 bolt, 2 x M8 washers and an M8 nyloc nut.

40. Ensure the top faces of the curved section and the side rail are parallel and tighten the fasteners to the above specified torque.

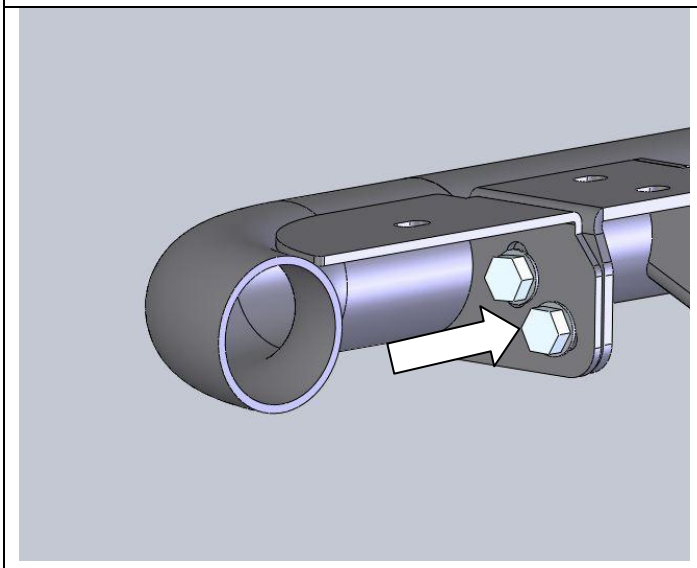

41. Using an electric drill with an Ø8mm drill bit and the pre-cut hole in the curved end section as a guide, drill through the rear section.

Warning: Drilling operations can result in flying metal debris, safety glasses should be worn.

NOTE: IT MAY BE NECESSARY TO TEMPORARILY REMOVE THE MUD FLAPS TO GAIN ACCESS WITH THE DRILL.

42. Apply paint or a rust preventative to the bare metal.

43. Pin the curved end section to the rear section using an M8 bolt, 2 x M8 washers and an M8 nyloc nut and tighten to the specified torque.

M8-22Nm

44. Repeat on the LH side.

Copyright © 2005 by ARB Corporation Limited. All rights reserved, this document must not be reproduced without the express authority of ARB Corporation Ltd

THE FOLLOWING STEPS APPLY TO BOTH SIDE RAIL AND FRONT SECTION FITMENT

45. Run a bead of silicon along the top of the rail where the checker top will sit. (This will help prevent vibration).

46. Position the checker top on the step, aligning the bolt holes with the corresponding holes in the side step. Starting at the front of the step, secure the checker top with M6 dome head bolts, M6 panel washers and M6 flange nuts.

M6-7Nm

NOTE: wipe off any excess silicon immediately

47. If fitting front rails, apply the supplied ARB decals here on both the RH and LH sides of the vehicle.

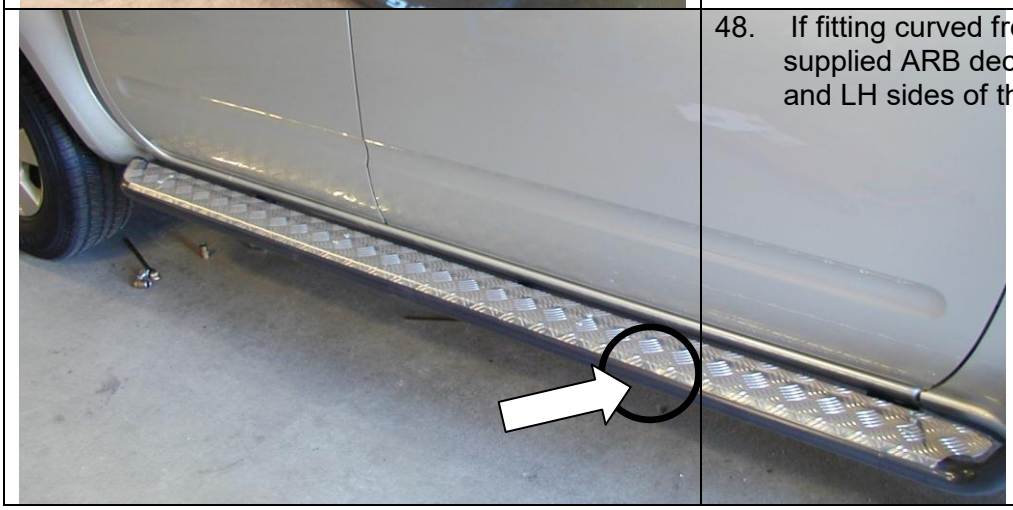

48. If fitting curved front sections, apply the supplied ARB decals here on both the RH and LH sides of the vehicle.

Copyright © 2005 by ARB Corporation Limited. All rights reserved, this document must not be reproduced without the express authority of ARB Corporation Ltd

FITTED PRODUCT

Copyright © 2005 by ARB Corporation Limited. All rights reserved, this document must not be reproduced without the express authority of ARB Corporation Ltd