FITTING INSTRUCTIONS

Part Number: **4421050 / 4421060 / 4421070 / 4421140 / 4421150 / 4421160**

Product Description:

4421050 – S/STEP PRADO 120 (MILL. GREY)
4421060 – F/RAIL PRADO 120 (MILL. GREY)
4421070 – RETURN PRADO 120 (MILL. GREY)
4421140 – S/STEP PRADO 120 (BLACK)
4421150 – F/RAIL PRADO 120 (BLACK)
4421160 – RETURN PRADO 120 (BLACK)
3500280-S/RAIL ANTENNA KIT 47.6mm

Suited to vehicle/s: **PRADO 120 ALL MODELS 2003 – 2009.**

WARNING

REGARDING VEHICLES EQUIPPED WITH SIDE AIR CURTAINS & SIDE AIRBAGS;

When installed in accordance with these instructions, the Side Step and Side Rail does not affect operation of the Side Air Curtains and Side Airbags.

ALSO, NOTE THE FOLLOWING:

- This product must be installed exactly as per these instructions using only the hardware supplied.
- In the event of damage to any Side Step and Side Rail component, contact your nearest authorised ARB stockist. Repairs or modifications to the impact absorption system must not be attempted.
- Do not use this product for any vehicle make or model, other than those specified by ARB.
- This product or its fixing must not be modified in any way.
- The installation of this product may require the use of specialized tools and/or techniques
- It is recommended that this product is only installed by trained personnel
- These instructions are correct as at the publication date. ARB Corporation Ltd. cannot be held responsible for the impact of any changes subsequently made by the vehicle manufacturer
- During installation, it is the duty of the installer to check correct operation/clearances of all components
- Work safely at all times

  Unless otherwise instructed, tighten fasteners to specified torque

ARB 4x4 ACCESSORIES

Corporate Head Office

42-44 Garden St
Kilsyth, Victoria.
AUSTRALIA. 3137.

Tel: +61 (3) 9761 6622
Fax: +61 (3) 9761 6807

Australian enquiries sales@arb.com.au
North & South American enquiries sales@arbusa.com
Other international enquiries exports@arb.com.au

www.arb.com.au

Copyright © 2023 by ARB Corporation Limited. All rights reserved, this document must not be reproduced without the express authority of ARB Corporation Ltd

GENERAL CARE AND MAINTENANCE

By choosing an ARB Side Step and Side Rail, you have bought a product that is one of the most sought after 4WD products in the world. Your step and rail is a properly engineered, reliable, quality accessory that represents excellent value. To keep your step and rail in original condition it is important to care and maintain it following these recommendations:

- Prior to exposure to the weather your step and rail should be treated to a Carnauba based polish on all exposed surfaces. It is recommended that this is performed on a six monthly basis or following exposure to salt, mud, sand or other contaminants.

As part of any Pre Trip Preparation, or on an annual basis, it is recommended that a thorough visual inspection of the step and rail and surrounding components is carried out, making sure that all bolts are torqued to the correct specification. Also check that nearby wiring and plumbing are free of damage. Replace any components as necessary. This service can be performed by your local authorized ARB Stockist.

FITTING REQUIREMENTS

REQUIRED TOOLS FOR FITMENT OF PRODUCT:

METRIC SOCKET SET	METRIC COMBINATION SPANNER SET
ELECTRIC DRILL Ø 13 MM CAPACITY	Ø 4,8, 8.5 mm DRILL BITS
PHILLIPS AND FLAT BLADED SCREW DRIVER SET	METRIC MEASURE TAPE
BLACK SILICONE	STEEL RULE 0-300 mm
HAMMER	TIN SNIPS
MASKING TAPE	MARKER PEN
SCISSORS	SMALL FLAT & ROUND FILES
RUST PREVENTIVE PAINT	ALLEN KEY SET
TORQUE WRENCH 9-77Nm	AXLE STANDS (OPTIONAL)

HAVE AVAILABLE THESE SAFETY ITEMS WHEN FITTING PRODUCT:

Protective eyewear		**Hearing protection**	

NOTE: 'WARNING' notes in the fitting procedure relate to OHS situations, where to avoid a potentially hazardous situation it is suggested that protective safety gear be worn or a safe work procedure be employed. If these notes and warnings are not heeded, injury may result.

FASTENER TORQUE SETTINGS:

SIZE	Torque Nm	Torque lb/ft
M6	9Nm	7lbft
M8	22Nm	16lbft
M10	44Nm	32lbft

Copyright © 2023 by ARB Corporation Limited. All rights reserved, this document must not be reproduced without the express authority of ARB Corporation Ltd

PARTS LISTING

APPLICATION.	PART NO.	QTY	DESCRIPTION
SIDE STEPS TO VEHICLE	*6562733R*	*1*	*RAIL ASSY S/STEP RH (MILL. GREY)*
	6562733L	*1*	*RAIL ASSY S/STEP LH (MILL. GREY)*
	6562872R	*1*	*RAIL ASSY S/STEP RH (BLACK)*
	6562872L	*1*	*RAIL ASSY S/STEP LH (BLACK)*
	6151796	4	BOLT M10 X 1.5 X 170 TL32 GR8.8 TZP
	6151509	4	BOLT M10 x 1.5 x 110 GR8 ZP
	6151357	10	BOLT SEMS M10 X 30 ZP Gd 8.8
	6151084	2	BOLT M8 x 1.25 x 40 Gd 8.8 ZP
	6151684	1	BOLT M8 x 1.25 x 30 Gd 8.8 BTZP
	4581040	8	WASHER FLAT, M10 x 25 x 3 ZP
	4584296	4	WASHER 30 X 11 X 5 TZP480
	4581046	3	WASHER SPRING M8 x 3/32 x 3/32
	4581044	3	WASHER FLAT, M8 ZP
	4654084	10	NUT PLATE M10X1.5
	4581020	2	WASHER FLAT M8 x 30 x 3 TZP480
	6151322	4	NUT NYLOC M10 x 1.5 PC8 TZP480
	3194901	2	MOUNT PLATE THREADED
	5811065	4	SLEEVE S/STEP MOUNT BRKT T6
	3194911	4	PLATE SPACER 8mm
	4584391	8	WASHER 24mm
	4721749	2	TUBE SPACER 19MM
	271BLK	2	PLUG RUBBER SIDE RAIL
	215637	2	STKR DECAL ARB SMALL
	3789579	1	PRADO 120 S/STEPS FITTING INSTN
SIDE RAILS TO VEHICLE	*6562731R*	*1*	*RAIL ASY F/RAIL RH PRADO 120 (M.G)*
	6562731L	*1*	*RAIL ASY F/RAIL LH PRADO 120 (M.G)*
	6562874R	*1*	*RAIL ASY F/RAIL RH PRADO 120 (B)*
	6562874L	*1*	*RAIL ASY F/RAIL LH PRADO 120 (B)*
	6151022	4	BOLT M8X1.25X25 HEX HD ZP GR 8
	4581044	8	WASHER FLAT M8X17X1.6 ZP
	6151032	4	NUT HEX LOCK NYLOC M8 X 1.25
	3194903L	1	TREAD PLATE S-RAIL LH PRADO 120
	3194903R	1	TREAD PLATE S-RAIL RH PRADO 120
	4581072	16	WASHER FLAT M6 X 1.6 X 20 TZP
	6151128	16	M6 X 1.0 FLANGE NUT ZP
	6151256	16	S/S M6 X 16 BHCS
	271BLK	2	PLUG RUBBER
	3500230	1	SIDE RAIL CLAMPS
SIDE STEP RETURN SECTIONS TO V EHICLE	*6562735R*	*1*	*RAIL S/STEP CAP T6 LRG RAD RH (M.G)*
	6562735L	*1*	*RAIL S/STEP CAP T6 LRG RAD LH (M.G)*
	6562873R	*1*	*RAIL ASY R/RAIL RH PRADO 120 (B)*
	6562873L	*1*	*RAIL ASY R/RAIL LH PRADO 120 (B)*
	4581044	8	WASHER FLAT M8X17X1.6ZP
	6151022	4	BOLT M8X1.25X25 HEX HD ZP GR 8

Copyright © 2023 by ARB Corporation Limited. All rights reserved, this document must not be reproduced without the express authority of ARB Corporation Ltd

	6151032	4	NUT HEX LOCK NYLOC M8 X 1.25
	271BLK	2	PLUG RUBBER
	3194880	2	TREAD PLATE R/RAIL EVEREST
	6151128	16	M6 X 1.0 FLANGE NUT ZP
	6151256	16	S/S M6 X 16 BHCS
	4581072	16	WASHER FLAT M6 X 1.6 X 20 TZP

FITTING PROCEDURE – PREPARATION TO VEHICLE

1. If fitted, remove the factory side steps retaining all fasteners.
2. Refit the fasteners into the captive nuts in the vehicles body to seal against water ingress.

3. Remove 2 M8 bolts retaining the hand brake cable to the outside of chassis rail at rear wheel on both sides.

4. On both sides of the vehicle, check the transmision cross member mounts for high spots or weld spatter along the seam weld and remove with a flat file.

Copyright © 2023 by ARB Corporation Limited. All rights reserved, this document must not be reproduced without the express authority of ARB Corporation Ltd

5. On the L/H side remove the 3 M8 fasteners securing the fuel tank sheild to the chassis rail. Trim the front locating tab with snips to provide clearance for the new mounting bolt.

SIDE STEP FITMENT TO VEHICLE

6. Fit the rubber plugs into the rear most ends of the side rails.

7. Place jack or similar prop underneath the transmission cross-member and adjust so that the transmission is supported, as shown.

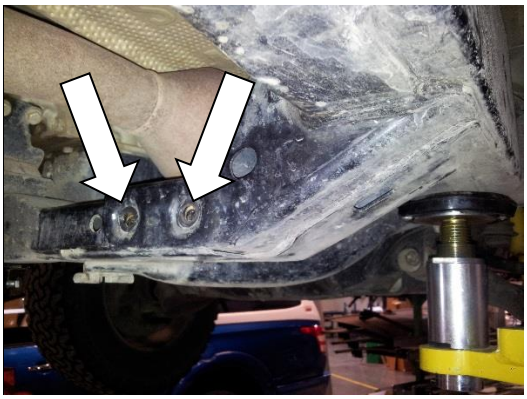

8. Starting on the right hand (RH) side of the vehicle, remove the transmission cross-member through bolts.

Copyright © 2023 by ARB Corporation Limited. All rights reserved, this document must not be reproduced without the express authority of ARB Corporation Ltd

	9. Offer the front mount up to the trans cross member and insert 1 x M10 x 155L bolts to hold step in postion.Support the rear of step with the appropreate stand so that the centre mount is up against the bottom of the chassis.The step will be stable at this point.
SIDE STEP FITMENT TO VEHICLE	

Copyright © 2023 by ARB Corporation Limited. All rights reserved, this document must not be reproduced without the express authority of ARB Corporation Ltd

10. At the front mount install the 2nd M10 x 155L bolt and 2 x 22mm washers. One washer each side of the cross member .The purpose of these washers is to take up the space created by the embossed feature of the factory mount. Pull out the previously fitted bolt and reinstall with 22mm washers.
    Do not install the packer plates (3174911) till step 17.

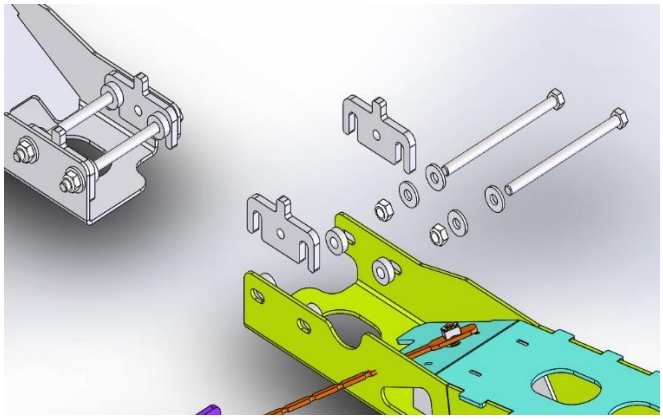

Copyright © 2023 by ARB Corporation Limited. All rights reserved, this document must not be reproduced without the express authority of ARB Corporation Ltd

SIDE STEP FITMENT TO VEHICLE - CONTINUED

Front mount wing to cross member (above).

11. Carefully bend the nut plate tails so that you are able to align the plate with the hole in the chassis.

Warning: It is important to only make small adjustments of the nut plate at a time so as not to risk breaking the tail.

(Images at Left Show Nut Plates Bent for RH Step Installation).

12. Repeat for the left hand side (LH).

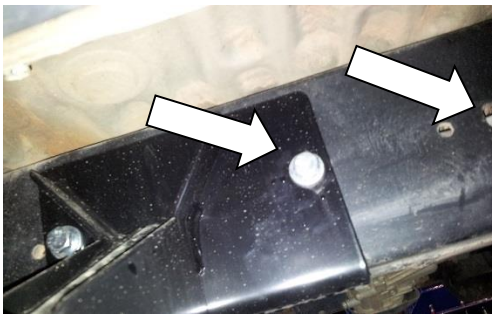

Center mount front bolt.

13. For the centre mount bend 3 nut plates as shown. Insert into the slots in chassis rail as shown. **Leave loose at this stage**.

Copyright © 2023 by ARB Corporation Limited. All rights reserved, this document must not be reproduced without the express authority of ARB Corporation Ltd

SIDE STEP FITMENT TO VEHICLE - CONTINUED

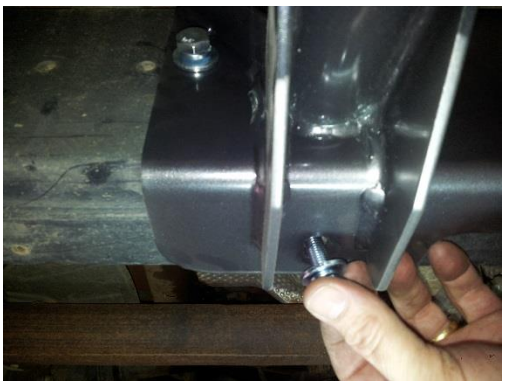

Centre mount bottom bolt

14. Insert nut plate for bottom bolt through the same chassis slot as previous plate and insert bolt from bottom. **Leave loose at this stage**.

Copyright © 2023 by ARB Corporation Limited. All rights reserved, this document must not be reproduced without the express authority of ARB Corporation Ltd

15. At the rear mount, using the fasteners shown fit the threaded plate to the inside face of the chassis rail.
16. On the L/H side this plate will go under any hard lines attached to the chassis rail. **Take care not to damage any hard lines.**

Copyright © 2023 by ARB Corporation Limited. All rights reserved, this document must not be reproduced without the express authority of ARB Corporation Ltd

SIDE STEP FITMENT TO VEHICLE - CONTINUED

17. At the front mount use 2 packer plates ,1 front 1 rear to secure the step spacing before tightening the fasteners

18. Insure the round spacers installed earlier are on the cross member side of the packer plate as shown. Push plate down until it is level and resting on the through bolts.
19. Go round the side rail mounts and tighten all M10 bolts. 9 bolts per side.

Torque to specification.

M10 44Nm (BOLTS)

Copyright © 2023 by ARB Corporation Limited. All rights reserved, this document must not be reproduced without the express authority of ARB Corporation Ltd

SIDE STEP FITMENT TO VEHICLE - CONTINUED

20. Using M8x 40mm bolt with spring washer, flat washer and spacer tube from the kit refit the rear hand brake cable mount to the chassis. Use the OE bolt to attach the front cable mount to the chassis. Repeat for the left hand side (LH).

    Torque to specification.

    M8 22Nm (BOLTS)

21. On L/H side refit the fuel tank shield with spacers (4581020) on 2 OE bolts as shown. On the front of shield install M8 x 30mm bolt spring washer and flat washer from the kit.

    Torque to specification.

    M8 22Nm (BOLTS)

Copyright © 2023 by ARB Corporation Limited. All rights reserved, this document must not be reproduced without the express authority of ARB Corporation Ltd

FITTING PROCEDURE

NOTE: IF FITTING CURVED END SECTIONS PROCEED TO STEP 35. IF FITTING FRONT RAILS CONTINUE FROM HERE.

FITTING FRONT SIDE RAILS 4421060.

22. To protect the paint / powder coating on the bull bar, place masking tape on the vertical section of the outer frames.

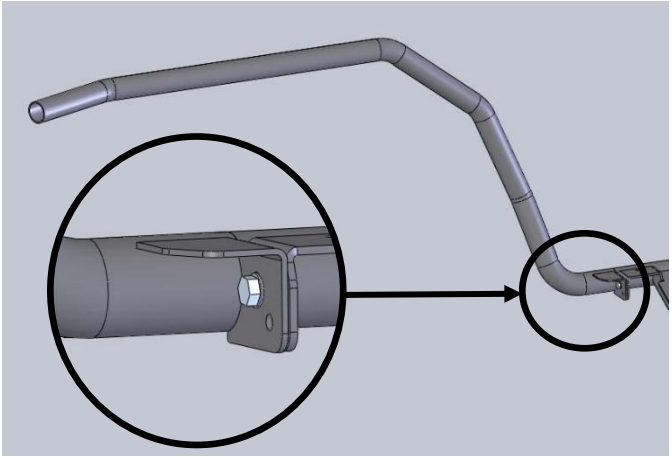

23. Verify the fit of the side rails by checking the RH side first.
24. Place the end section assembly onto the end of the side rail rear section as shown, check gap to outer frame on bull bar, there should be approximately 6mm gap, also check the wing to rail dimension shown in step 27 before setting rail height.
25. Now check the LHS
26. If the gap is correct fit rubber bung and refit to rear rail connection point then attach using an M8 bolt, 2 x M8 washers and an M8 nyloc nut.

    Leave loose at this stage.

Copyright © 2023 by ARB Corporation Limited. All rights reserved, this document must not be reproduced without the express authority of ARB Corporation Ltd

FITTING PROCEDURE

27. Fit the front rail to the bull bar using the side rail clamps provided. Align rail so that it runs parallel to bull bar wing (approximately 80 to 85mm from underside of rail to top face of wing). Ensure there is a minimum 20mm clearance between the side rail and the body.

    NOTE: USE A CLAMP SUCH AS A G-CLAMP OR VICE GRIPS TO HOLD THE SIDE RAIL CLAMP IN PLACE.

28. Using the holes in the clamp as a guide, drill 8.5mm holes through the front rails and bull bar outer frame.
29. Remove the masking tape and bolt the side rail in place with M8 x 70mm dome head bolts, black M8 flat washers and black M8 nyloc nuts.

    Torque to specification.

    M8 22Nm (BOLTS)

30. Repeat steps 22-29 on the LH side

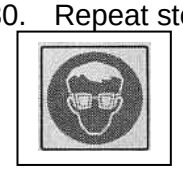

Warning: Drilling operations can result in flying metal debris, safety glasses should be worn.

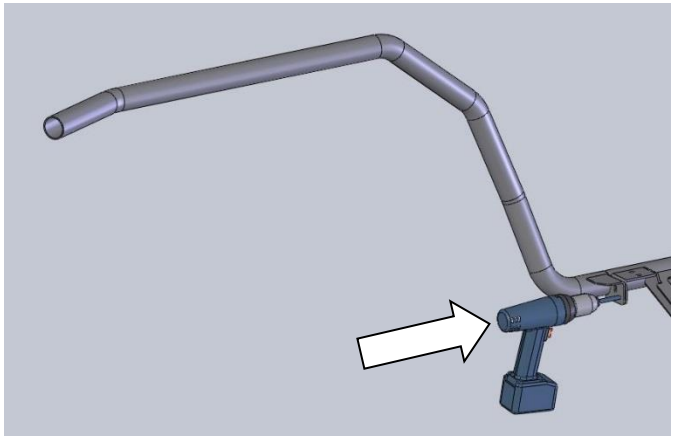

31. Using an electric drill with an Ø8mm drill bit and the pre-cut hole in the front side rail as a guide, drill through the rear section.
32. Apply paint or a rust preventative to the bare metal.

Warning: Drilling operations can result in flying metal debris, safety glasses should be worn.

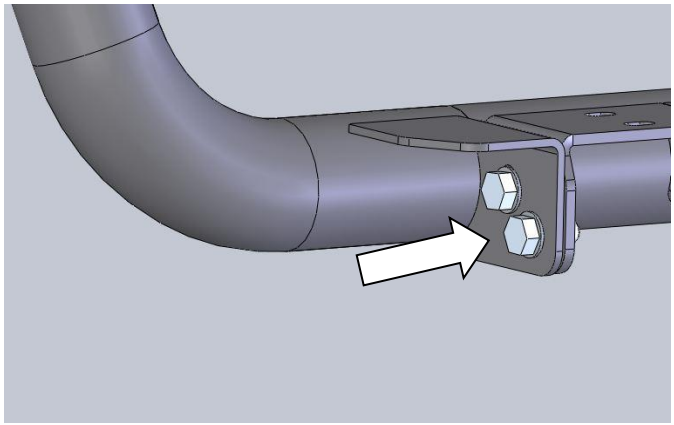

33. Pin the front side rail to the rear section using an M8 bolt, 2 x M8 washers and an M8 nyloc nut and tighten to the specified torque.

    Torque to specification.

    M8 22Nm (BOLTS)

34. Repeat on the LH side.

Copyright © 2023 by ARB Corporation Limited. All rights reserved, this document must not be reproduced without the express authority of ARB Corporation Ltd

FITTING PROCEDURE

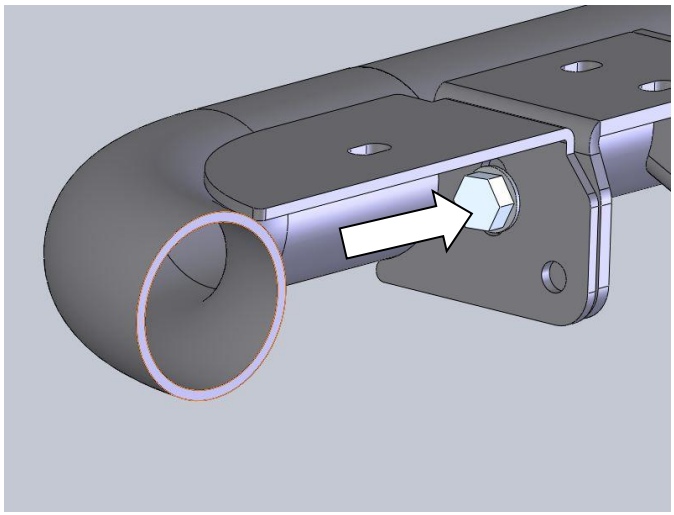

FITTING CURVED END SECTIONS 4421070

35. On the RH side fit the curved end section onto the side rail as shown and attach using an M8 bolt, 2 x M8 washers and an M8 nyloc nut.
36. Ensure the top faces of the curved section and the side rail are parallel and tighten the fasteners to the above specified torque.

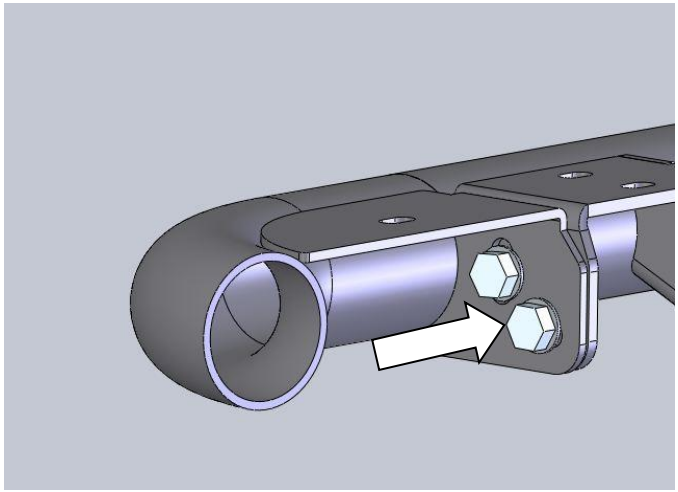

37. Using an electric drill with an Ø8mm drill bit and the pre-cut hole in the curved end section as a guide, drill through the rear section.

Warning: Drilling operations can result in flying metal debris, safety glasses should be worn.

NOTE: IT MAY BE NECESSARY TO TEMPORARILY REMOVE THE MUD FLAPS TO GAIN ACCESS WITH THE DRILL.

38. Apply paint or a rust preventative to the bare metal.
39. Pin the curved end section to the rear section using an M8 bolt, 2 x M8 washers and an M8 nyloc nut and tighten to the specified torque.

Torque to specification.

M8 22Nm (BOLTS)

40. Repeat on the LH side.

Copyright © 2023 by ARB Corporation Limited. All rights reserved, this document must not be reproduced without the express authority of ARB Corporation Ltd

FITTING PROCEDURE

THE FOLLOWING STEPS APPLY TO BOTH SIDE RAIL AND FRONT SECTION FITMENT

41. Run a bead of silicon along the top of the rail where the checker top will sit. (This will help prevent vibration).
42. Position the checker top on the step, aligning the bolt holes with the corresponding holes in the side step. Starting at the front of the step, secure the checker top with M6 dome head bolts, M6 panel washers and M6 flange nuts.

    Torque to specification.

    M6 7Nm (BOLTS)

    NOTE: wipe off any excess silicone immediately

43. If fitting front rails, apply the supplied ARB decals to Guard rail on both the RH and LH sides of the vehicle.

44. If fitting curved front sections, apply the supplied ARB decals to Step at the rear, on both the RH and LH sides of the vehicle.

Copyright © 2023 by ARB Corporation Limited. All rights reserved, this document must not be reproduced without the express authority of ARB Corporation Ltd

FITTED PRODUCT

Copyright © 2023 by ARB Corporation Limited. All rights reserved, this document must not be reproduced without the express authority of ARB Corporation Ltd