SMALL MOUNTING PARTS (SMP) INSTRUCTIONS

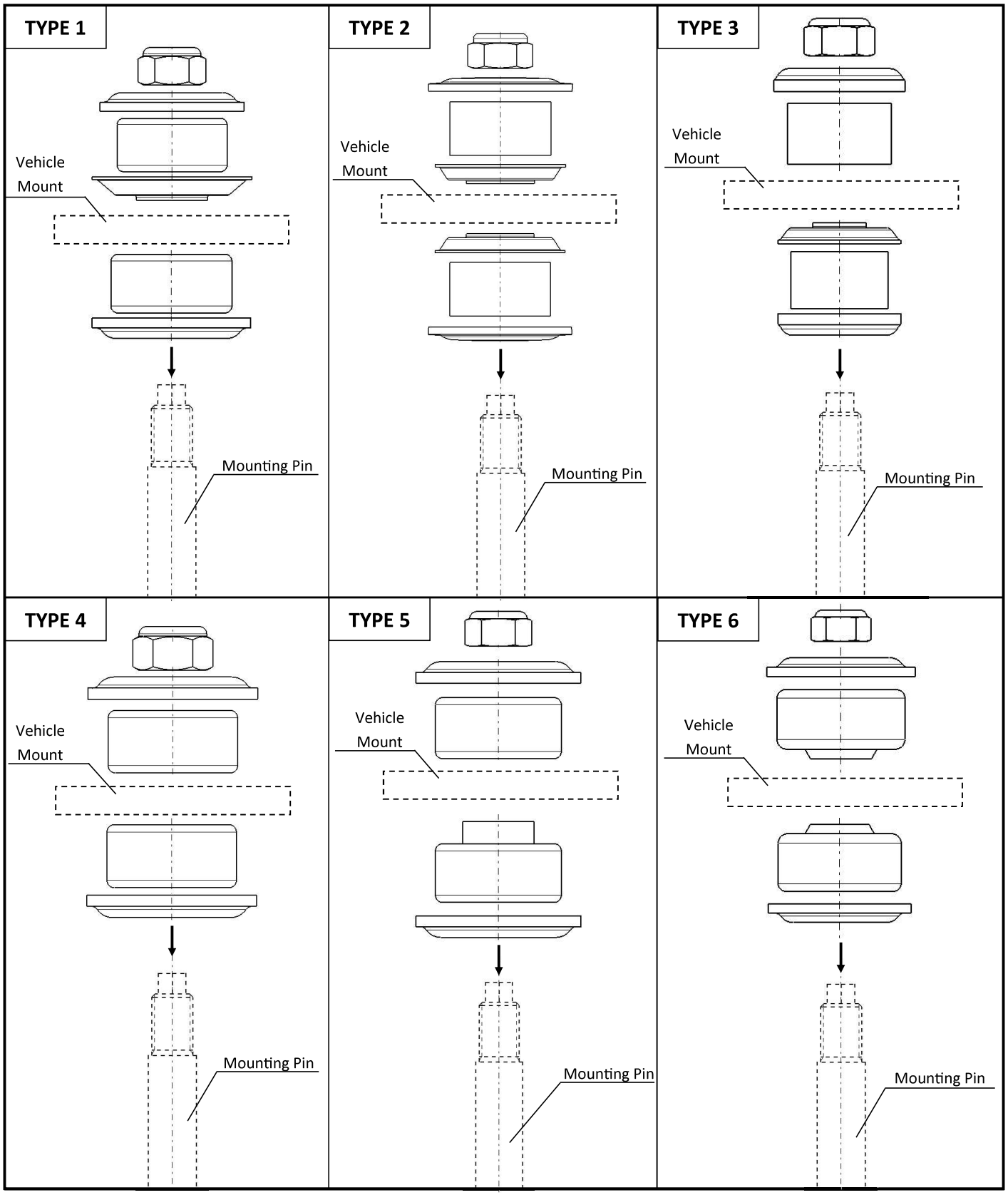

SMALL MOUNTING PARTS (SMP) INSTRUCTIONS

TYPE 7

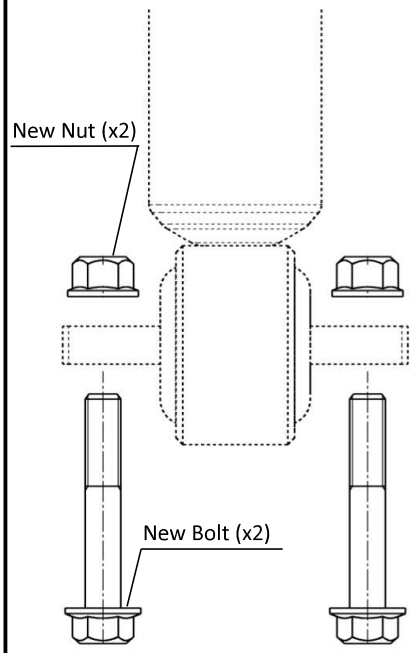

TYPE 8

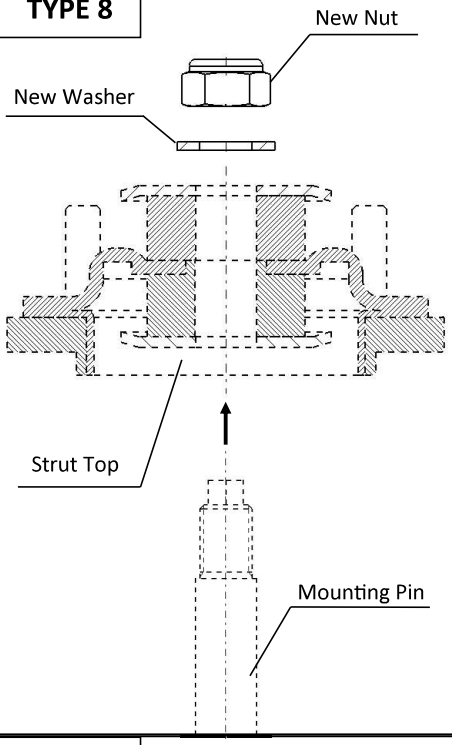

TYPE 9

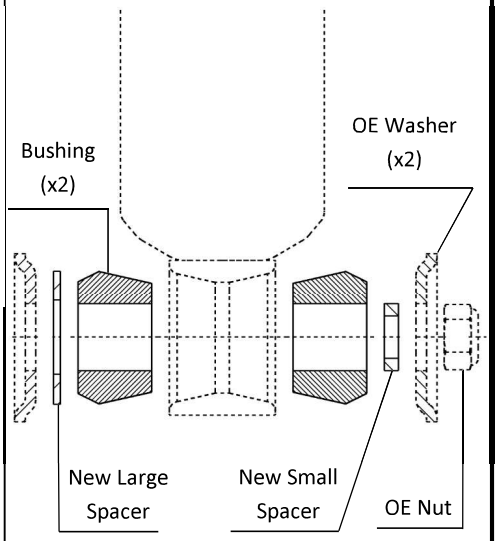

TYPE 10

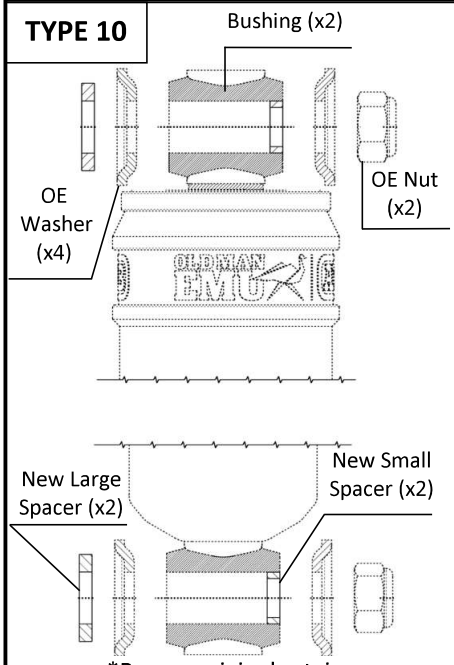

*Re-use original retainers, spring washer and nut.

TYPE 11

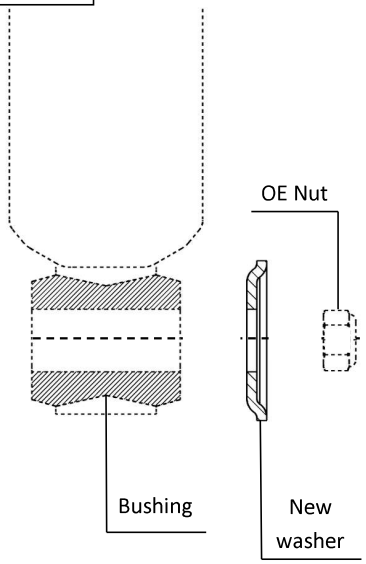

TYPE 12

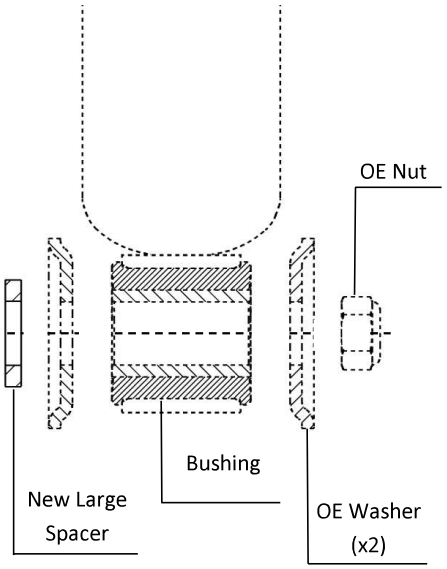

*Re-use original retainers, spring washer and nut.

- To ensure correct fitment of small mounting parts reference type number on SMP bag to above chart

ADJUSTABLE SPRING SEAT INSTRUCTIONS

Spring seat assembly

58mm Body (Formed seat)

PLACE SPACER BELOW SPRING SEAT IF REQUIRED; USE 1 MAXIMUM

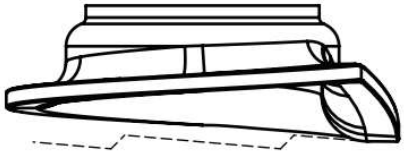

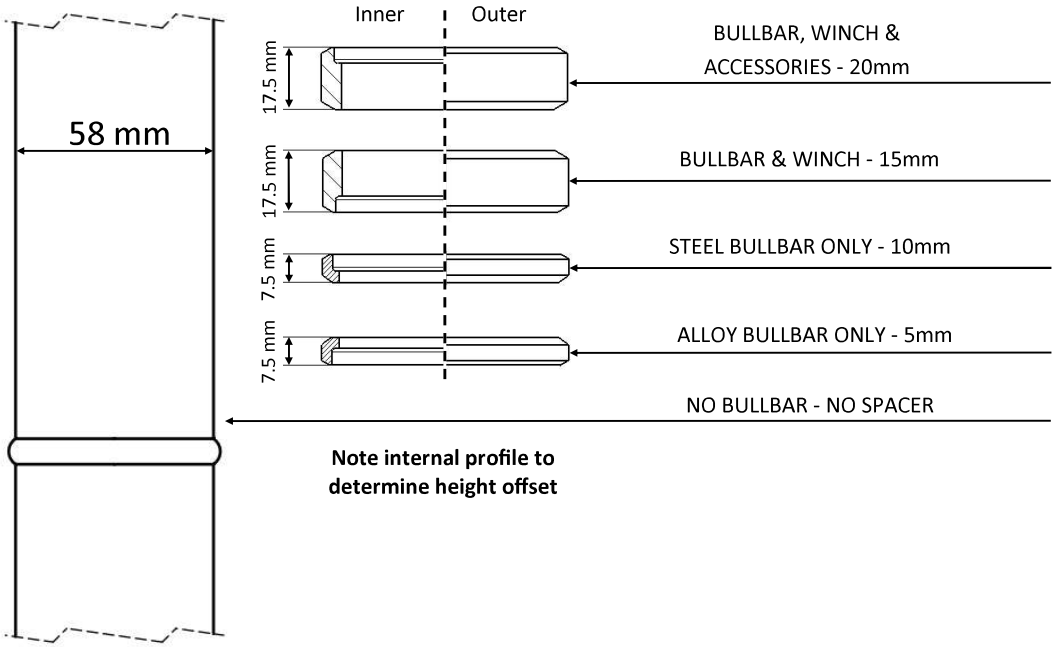

50mm Body (Grooved seat)

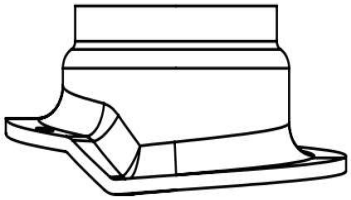

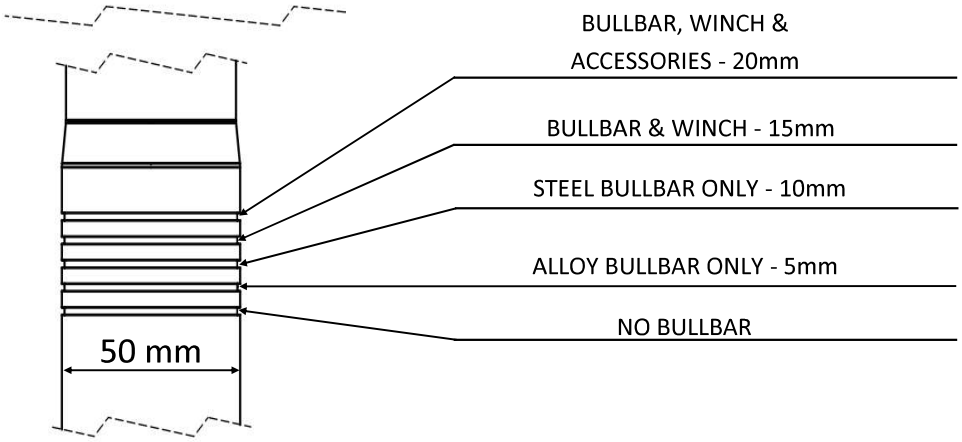

ADJUSTABLE SPRING SEAT INSTRUCTIONS

Install jounce cap after spring seat assembly

58mm Body

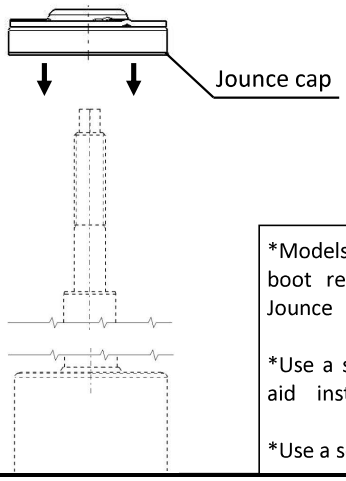

50mm Body

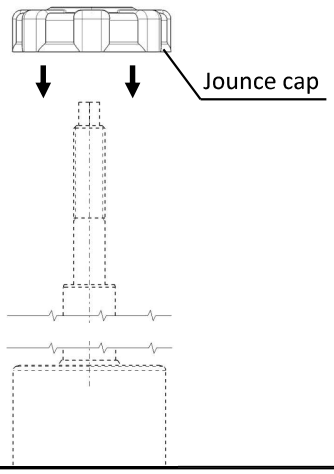

*Models supplied without dust boot require OE dust boot and Jounce bumper to be re-used

*Use a small amount of grease to aid installation of jounce cap

*Use a soft hammer to install cap

MOUNTING INSTRUCTIONS

List of Torques

Thread	M8	M10	M12	M14
Torque (Nm)	13	25	45	72
Torque (ft lb)	10	19	34	54

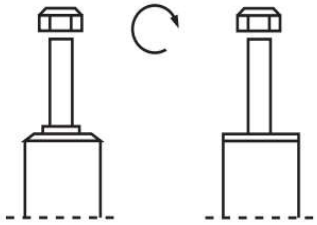

Do not use an impact tool to loosen or tighten fasteners due to possible damage to the product. Self-locking nuts must only be used once.

WARNING

- Refer to Vehicle Manufacturer's specifications for torque values.
- Do NOT use an impact gun for installation of this product
- Do not use this product for any vehicle make or model, other than those specified by Old Man Emu / ARB.
- Do not remove labels from suspension components.
- This product or its SMP kit must not be modified in any way.
- The installation of this product may require the use of specialised tools and/or techniques.
- All rubber mounted strut/shock absorber attachments must not be fully tightened until after the suspension system is loaded (wheels on the ground)
- During installation, it is the duty of the installer to check correct operation/clearances & replace any worn component/fastener(s).
- Work safely at all times.