DRAWER SYSTEMS

Part Number: **UNISBBMK**

Product Description: **UNIVERSAL BATTERY MOUNTING KIT (SUITS SLIMLINE BAINTECH BATTERY)**

Suited to Vehicle: **ALL**

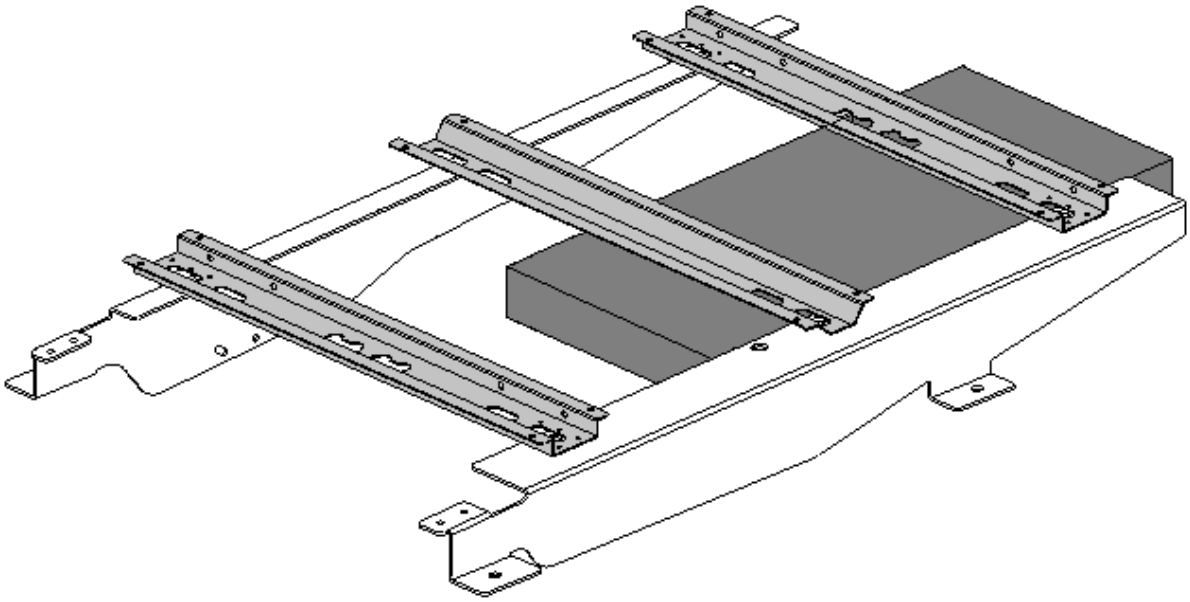

WARNING

- Care must be taken to ensure the vehicle is not damaged.
- Some parts of this operation require a 2-person lift.
- This product must be installed exactly as per these instructions using only the hardware supplied
- These instructions are correct as at the publication date
- During installation, it is the duty of the installer to check correct operation/clearances of all components
- Work safely at all times

ARB 4x4 ACCESSORIES

Corporate Head Office

www.arb.com.au

42-44 Garden St
Kilsyth, Victoria
AUSTRALIA 3137

Tel: +61 (3) 9761 6622
Fax: +61 (3) 9761 6807

Australian enquiries sales@arb.com.au
North & South American quiries sales@arbusa.com
Other international enquiries exports@arb.com.au

Copyright © by ARB Corporation Limited. All rights reserved. This document must not be reproduced without the express authority of ARB Corporation Ltd

REQUIRED TOOLS FOR FITMENT OF PRODUCT:

Spanner set	**Socket set**
Drill	**Ruler / Tape measure**
	9mm drill bit

PARTS LIST

PART	QTY	DESCRIPTION
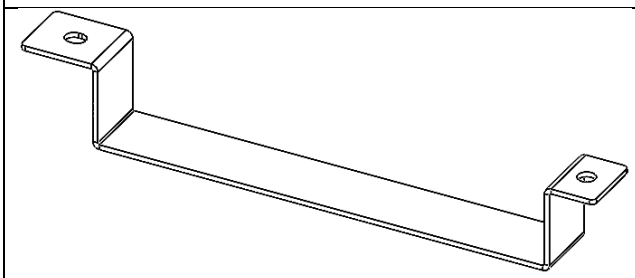	2	BATTERY MOUNT BRKT
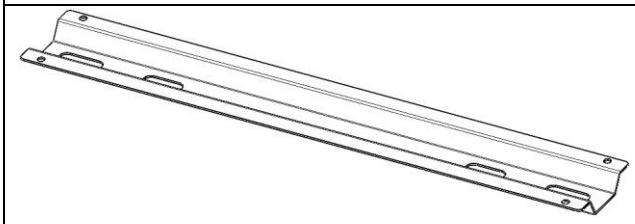	1	KIT TOP HAT
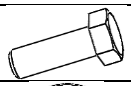	4	BOLT M8 x 25
	4	NUT M8 NYLOC
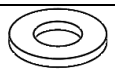	8	WASHER M8 FLAT
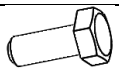	4	BOLT M6 X 16
	4	NUT M6 NYLOC

FASTENER TORQUE SETTINGS:

SIZE	Torque Nm	Torque lbft
M6	9Nm	7lbft
M8	22Nm	16lbft
M10	44Nm	32lbft
M12	77Nm	57lbft

Copyright © by ARB Corporation Limited. All rights reserved. This document must not be reproduced without the express authority of ARB Corporation Ltd

NAMING CONVENTION FOR DRAWERS

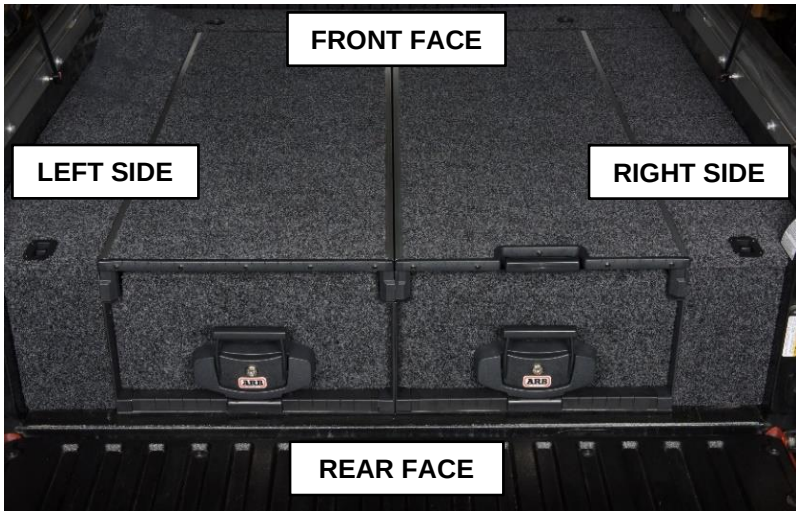

Drawers naming convention is defined from the point of view of the driver.

Front faces of drawers are closest to the front of the vehicle

The rear face of the drawers is closest to the tailgate/rear of the vehicle.

NAMING CONVENTION FOR BATTERY KIT

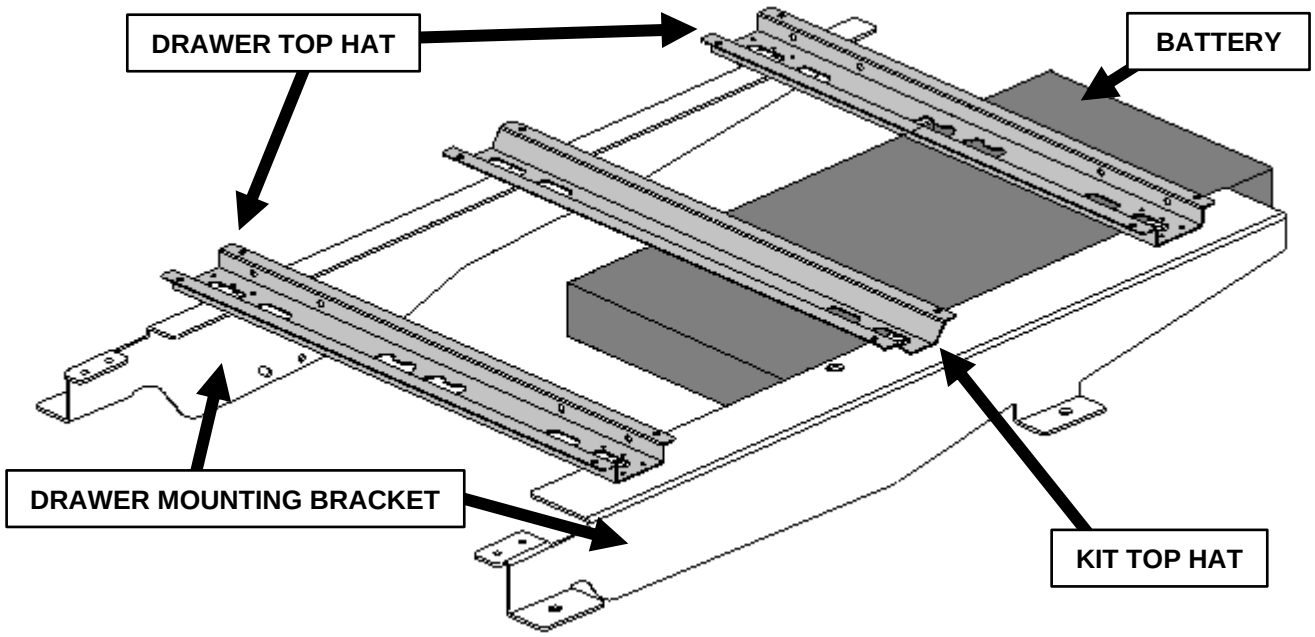

Note: One end of the Battery Mount Bracket (not shown) may be secured to the Top Hat through the Drawer Mounting Bracket.

Copyright © by ARB Corporation Limited. All rights reserved. This document must not be reproduced without the express authority of ARB Corporation Ltd

Section 1: Battery mounting configuration

Section 2: Option 1 - Top Hat preparation

Section 3: Option 2 - Drawer preparation
Top Hat preparation

Section 4: Drawer preparation

Section 5: Battery installation

BATTERY MOUNTING CONFIGURATION

There are two Top Hat configurations which can be used for mounting the battery, see images below. Option 2 is required if the distance between the middle of the Top Hats is longer than the battery.

NOTE: Images used throughout the instructions have typically had the drawers removed from view for clarity's sake.

OPTION 1

Use the pre-existing Drawer Top Hats to mount the battery.

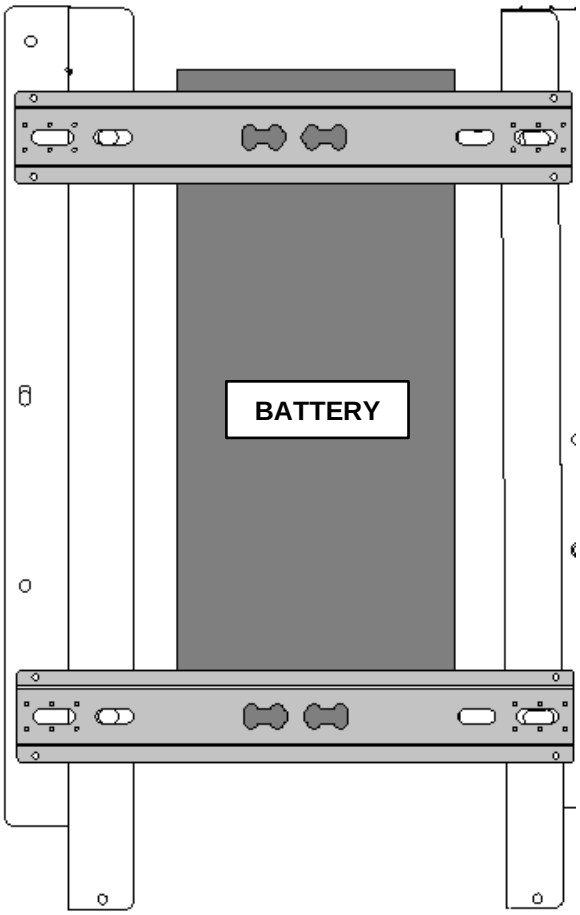

Example above uses Top Hats only to secure Battery Mount Bracket

OPTION 2

Use one pre-existing Drawer Top Hat and the Kit Top Hat to mount the battery.

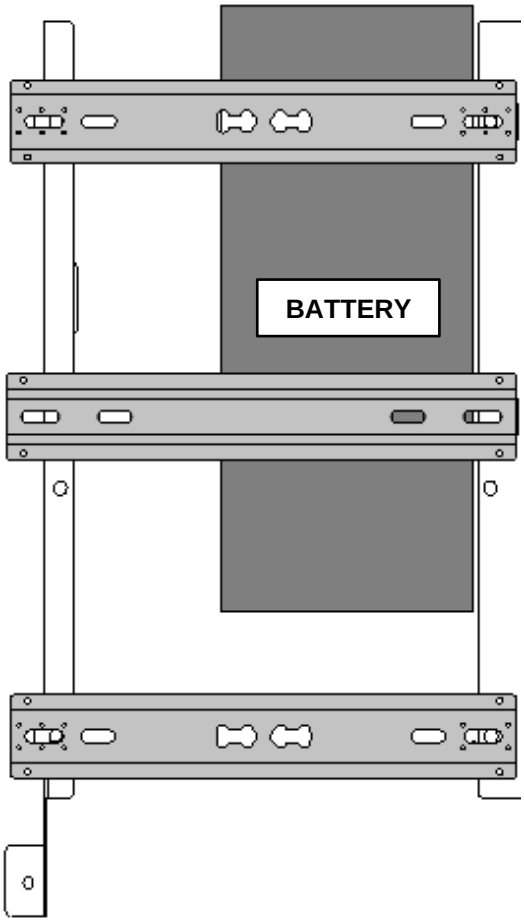

Example above uses Top Hat on left side and Top Hat + Drawer Mounting Bracket on right side to secure Battery Mount Bracket

If the drawers are already installed and Option 2 is required, the drawers will need to be removed from the vehicle first. The Kit Top Hat must then be attached to the underside of the drawers.

Copyright © by ARB Corporation Limited. All rights reserved. This document must not be reproduced without the express authority of ARB Corporation Ltd

It is recommended to do any Top Hat preparation, see steps below, with the drawers outside the vehicle. However, if Option 1 is being used it is not necessary to remove the drawers just to perform the Top Hat preparation.

NOTE: If drilling with the drawers installed in the vehicle it is recommended to cover the area under the Top Hats, to catch any swarf from the drilling operations.

OPTION 1

TOP HAT PREPARATION

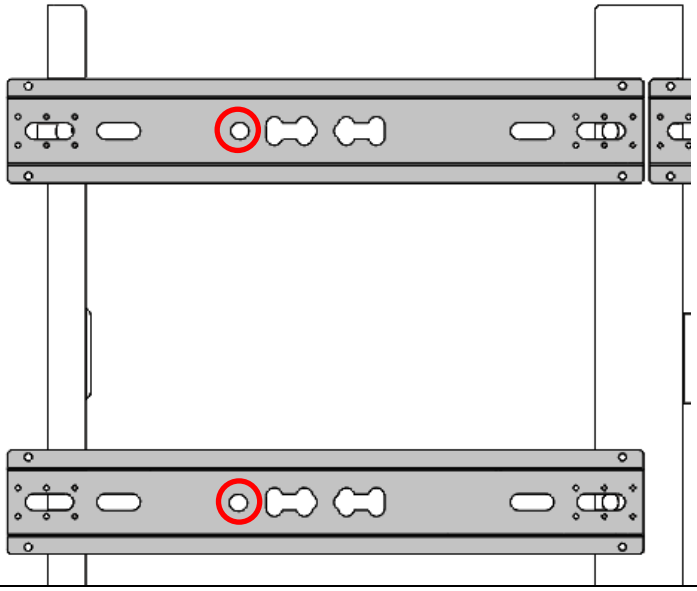

Additional holes are required in the Drawer Top Hats, see image left.

Use the Battery Mounting Bracket as a template to mark hole locations on the Drawer Top Hats.

Drill M8 clearance holes in the locations you have marked.

In the example shown left; one end of the Battery Mounting Bracket will use an existing slot in the Top Hats, the other end requires a clearance hole.

Depending on the desired location of the battery you may require x4 clearance holes.

OPTION 2

DRAWER PREPARATION

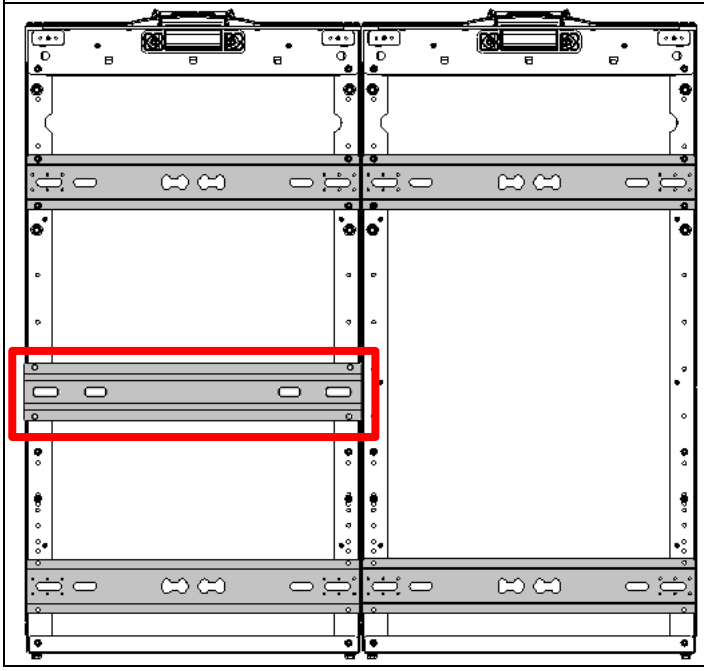

Measure:

- The length of the battery
- The distance between the Top Hats.

Identify a suitable mounting location for the Kit Top Hat, see image on first page for guidance.

Secure the Kit Top Hat to pre-exiting holes in the bottom of the drawers using 4x M6 bolts and nyloc nuts.

9Nm / 7lbft.

Copyright © by ARB Corporation Limited. All rights reserved. This document must not be reproduced without the express authority of ARB Corporation Ltd

TOP HAT PREPARATION

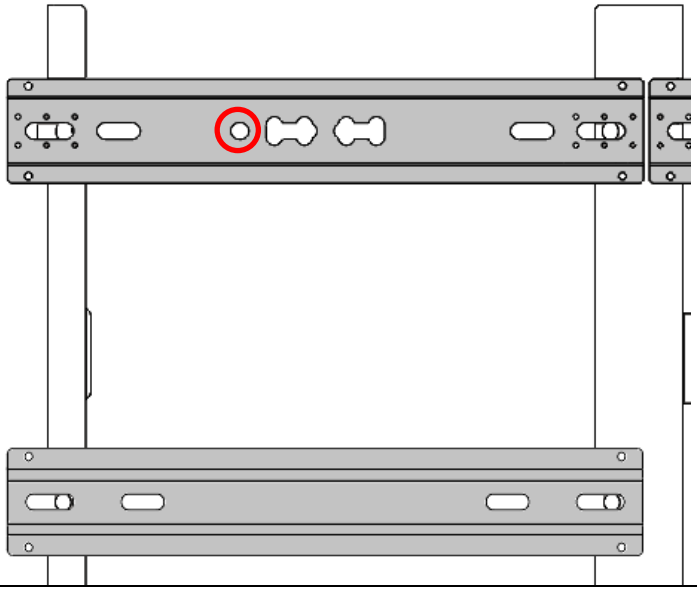

Additional holes are required in the Drawer Top Hats, see image left.

The Kit Top Hat does ***not*** typically require any additional holes.

Use the Battery Mounting Bracket as a template to mark hole locations on the Drawer Top Hats.

Drill M8 clearance holes in the locations you have marked.

In the example shown left; one end of the Battery Mounting Bracket will use an existing slot in the Drawer Top Hat, the other end requires a clearance hole.

BATTERY INSTALLATION

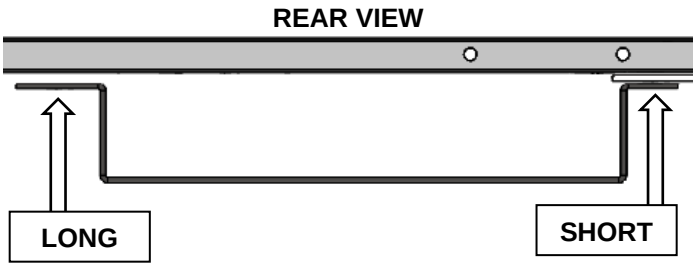

Check correct battery bracket orientation, see left.

If mounting through both the drawer Top Hat and Drawer Mounting Bracket the short end of the bracket typically mounts under the Drawer Mounting Bracket, using pre-existing holes/slots

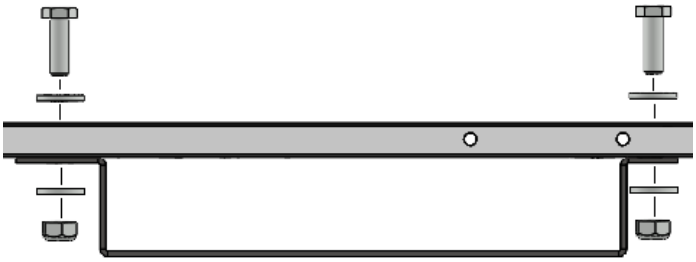

Use x4 M8x25 bolts, x8 M8 washers and x4 M8 nyloc nuts, loosely secure the battery brackets underneath the Top Hats

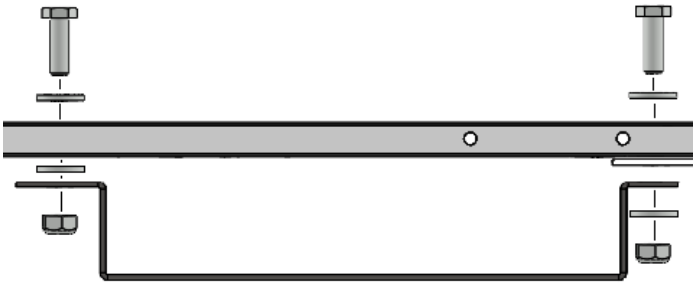

If mounting through the Drawer Mounting Bracket use one set of washers between the battery bracket and the long end of the Top Hat.

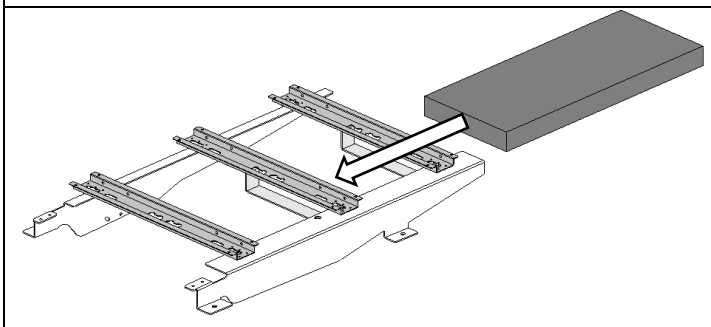

From the Front of the drawers (second row of seats) slide insert the battery into its mounted location.

Tighten all battery bracket mounting bolts.

22Nm / 16lbft.

Copyright © by ARB Corporation Limited. All rights reserved. This document must not be reproduced without the express authority of ARB Corporation Ltd