RHINO-RACK

Rhino Heavy Duty - Gutter Mount

Important: Please read these instructions carefully prior to installation.
Please refer to your fitting instruction to ensure that the roof racks are installed in the correct locations.
Check the contents of kit before commencing fitment and report any discrepancies.

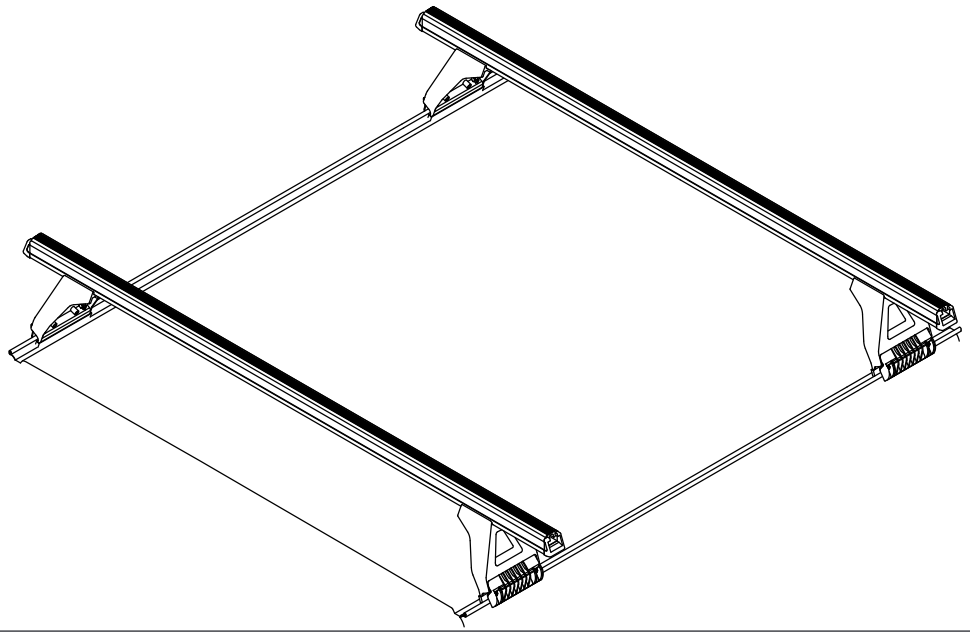

Important Information

Maximum carrying capacity: Please refer to your vehicle manufacturers handbook for maximum roof loading. Load must be evenly distributed over the crossbars.

Recommendations:

It is essential that all bolt connections be checked after driving a short distance when you first install your crossbars. Bolt connections and screw threads must be checked and lubricated at regular intervals (depending on road conditions, usage, loads and distances travelled). You should also check the crossbars each time they are refitted. Make sure to fasten your load securely. Please ensure that all loads are evenly distributed and that the centre of gravity is kept as low as possible.

Rhino-Rack cannot be held responsible for incorrect mounting of the roof rack system or for usage that exceeds vehicle and production tolerances.

Use only non-stretch fastening ropes or straps.

Caution: The handling characteristics of the vehicle changes when you transport a load on the roof. For safety reasons we recommend you exercise extreme care when transporting wind-resistant loads. Special consideration must be taken into account when cornering and braking.

Please remove crossbars when putting vehicle through an automatic car wash.

Load Ratings:
The vehicle manufactures recommended load rating is the maximum permissible load per pair of crossbars including the weight of the cross bars, 5kg (11lbs). When crossbars are to be used in off-road conditions, please build a safety factor of 1.5 into this load limit for off-road use. Although the crossbars are tested and approved to AS1235-2000, Off road conditions can be much more rigorous. However, increasing the number of crossbars does not increase the vehicles maximum permissible roof loading.

Note for Dealers and Fitters:
It is your responsibility to ensure instructions are given to the end user or client.

Rhino-Rack
3 Pike Street, Rydalmere,
NSW 2116, Australia.
(Ph) (02) 9638 4744
(Fax) (02) 9638 4822

Document No: RR-03
Prepared By: Kayle Everett
Authorised By: Chris Murty

Fit Time: 25min
Issue No: 08
Issue Date: 12/10/2016

These instructions remain the property of Rhino-Rack Australia Pty. Ltd. and may not be used or changed for any other purpose than intended.

Rhino Heavy Duty - Gutter Mount

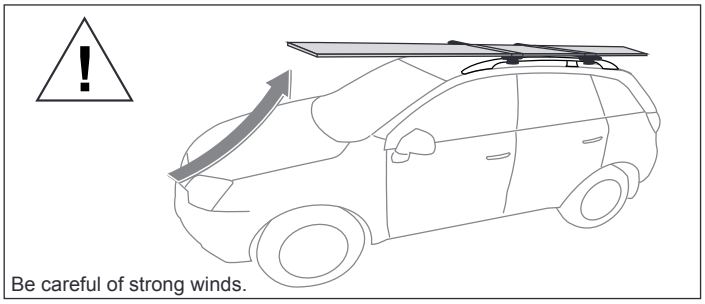

Be careful of strong winds.

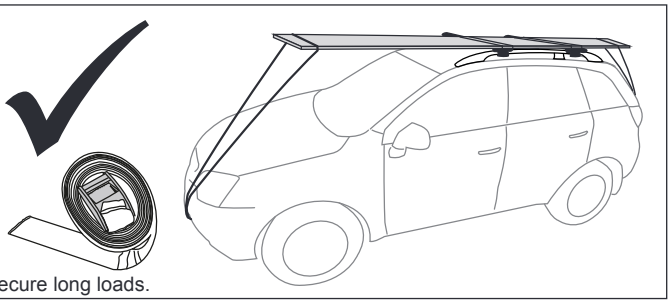

Secure long loads.

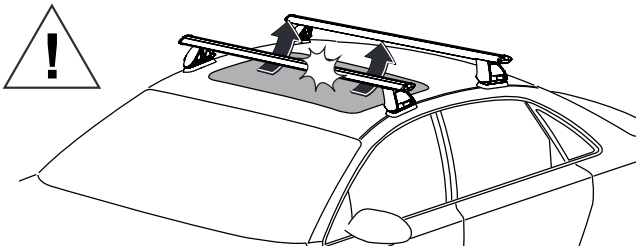

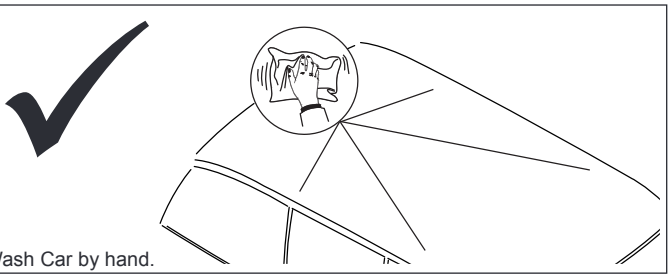

Wash Car by hand.

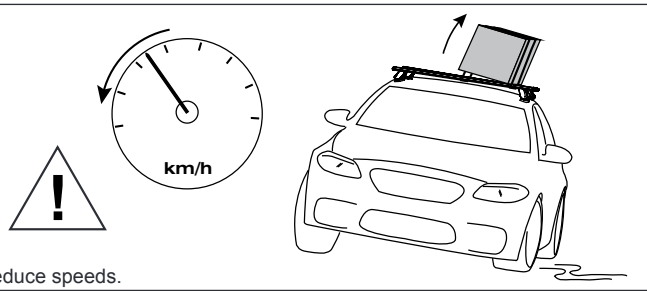

Reduce speeds.

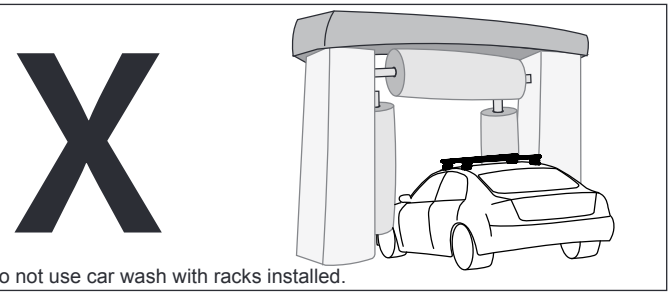

Do not use car wash with racks installed.

Ensure Ladder is well supported on the ground to help support tent. Take extreme caution when climbing heights above 1.2m/4ft.



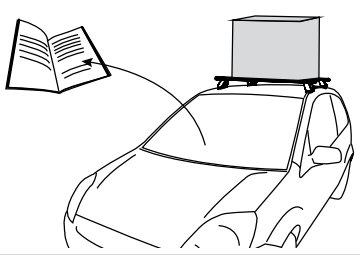

? kg/ lbs

Refer to owner manual for urban road roof load limits.

When these roof racks are to be used on a vehicle that is driven off sealed roads, the manufacturer maximum roof load rating (to be found in the vehicles User Manual) should be ***divided by 1.5***. Do not forget to subtract 5kg/11lbs from your maximum carrying capacity due to the weight of the crossbars and legs.

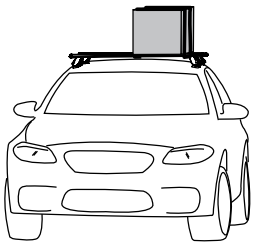

Refer to owner manual for urban road roof load limits.

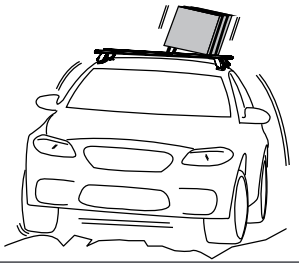

Divide load limit by 1.5 for off road.

WARNING! Important Load Carrying Instructions

With utility vehicles, the cabin and the canopy move independently. Roofracks and vehicle can be damaged if the item transported is rigidly fixed at points on both the cabin and canopy. Instead, rigidly fix to either the cabin roofracks or the canopy roofracks.

YES

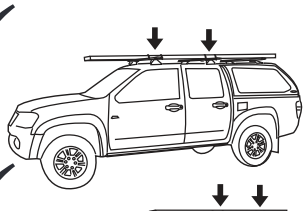

NO

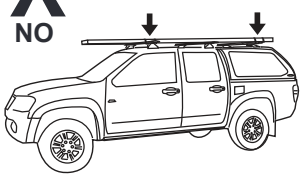

YES

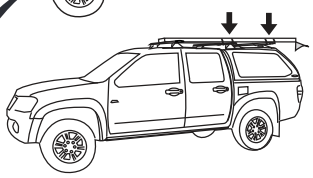

Paddle/ Surfboards should be fixed to the front of the vehicle.

YES

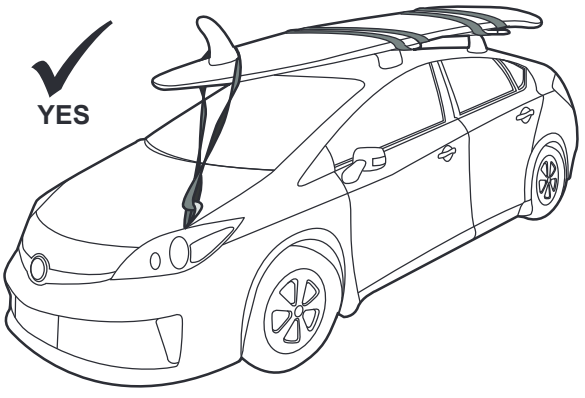

Parts List

Item	Component Name	Qty	Part No.
1	End Cap	2	M002
2*	Leg	2	-
3*	Gutter Mount Strap	2	-
4	Gutter Clamp	2	M003
5	M6 x 12.5mm Flat Washer	4	W003
6	M6 Spring Washer	4	W004
7	M6 x 35mm Torx Screw	4	B247
8	M10 Channel Nut	2	N024
9	M10 x 30mm Washer	2	W023
10	M10 Shake Proof Washer	2	W021
11	Gutter Mount Rubber Foot	2	M053
12	M10 x 25mm Bolt	2	B071
13	T27 Security Torx Key	1	H054
14	Fitting Instruction	1	RR-03

*Note: Items are kit specific. M150 shown.

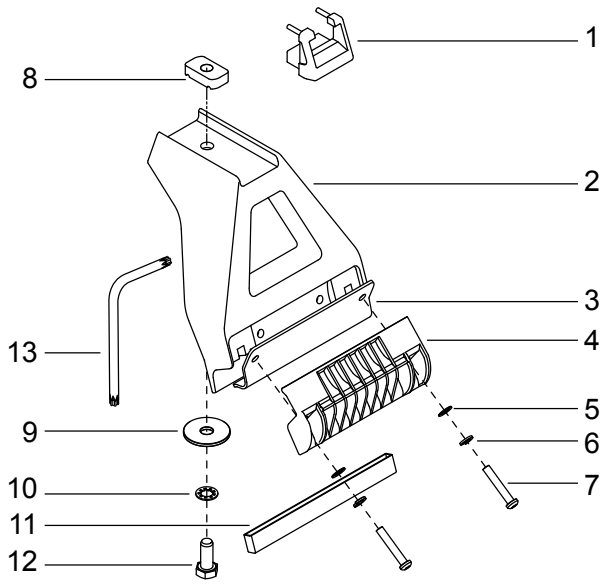

Tools Required;
16mm or 5/8” spanner, rubber mallet, security Allen key provided in kit, tape measure.

1 Loosen leg clamp screws. Install the rubber boot.

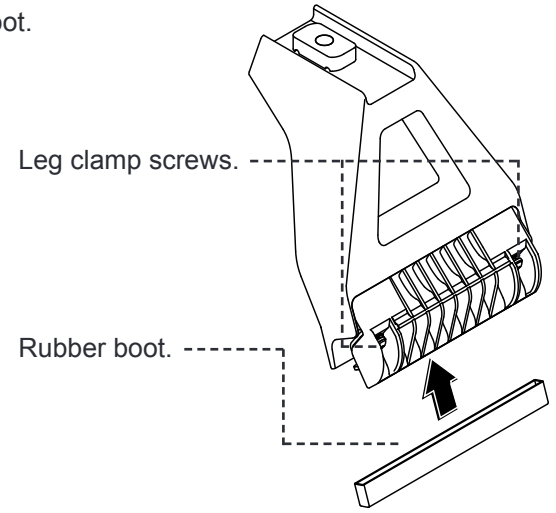

Note: M150 Leg shown. Specific kits may differ in appearance slightly.

2 Fit legs to vehicle gutter. Adjust each leg so the foot sits into the corner of the gutter.

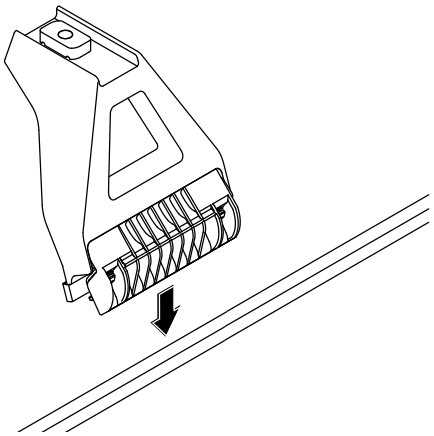

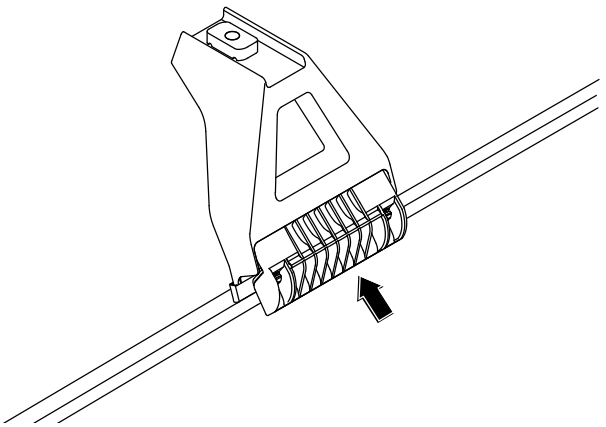

Note: M150 Leg shown.

Rhino Heavy Duty - Gutter Mount

3 Position the legs parallel across the vehicle. Measure from same point each side of the vehicle. Rotate the clamp underneath roof gutter lip. The clamp must be fully located into the corner of the gutter lip. Finger tighten clamp screws.

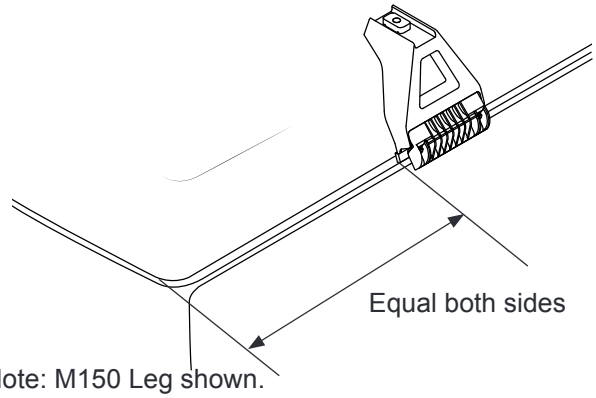

Note: M150 Leg shown.

4 Place crossbars onto legs. Push the leg attachment bolt up and turn so the channel nut is fully located across the inside of the bar. Finger tighten M10 bolt at this stage.

Channel nut must be properly located across the bar when tight. Note: M150 Leg shown.

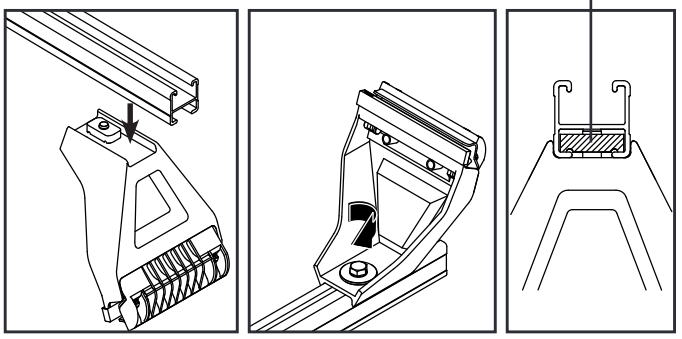

5 Measure for equal crossbar overhang. Hold the leg against outer edge of the gutter. Use a 5/8” or 16mm spanner and tighten M10 bolt & channel nut to 13-15 Nm. Do not over tighten.

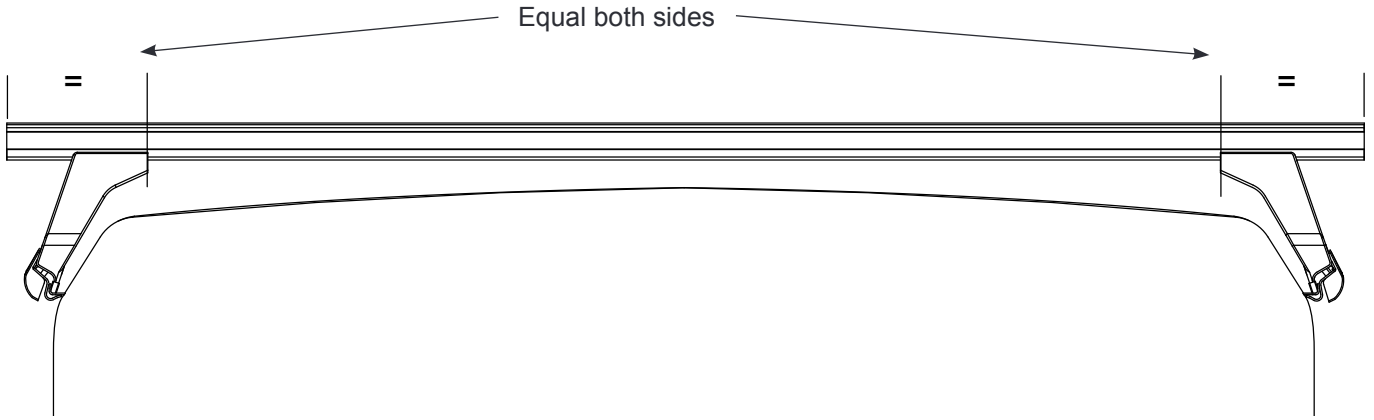

Note: M150 Leg shown.

6 Progressively tighten lower clamp screws to secure the roof rack to the gutter. Repeat the tightening process on each side of the vehicle. Tighten M6 Torx screws to 3-4 Nm. Do not over tighten.

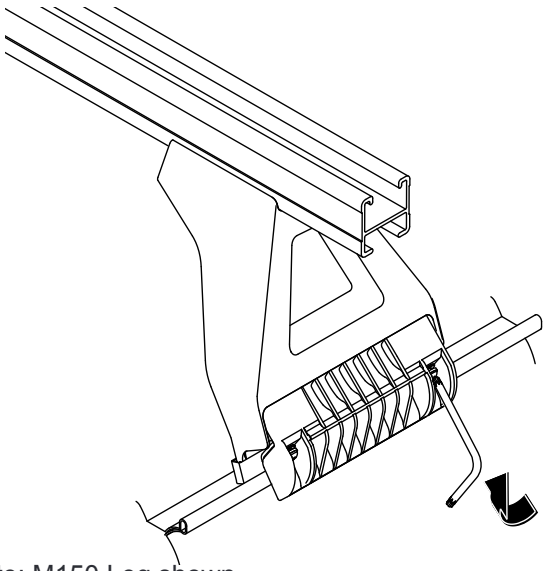

Note: M150 Leg shown.

7 Insert end caps and buffer strips into crossbar. A rubber mallet may be used to knock the end caps in. Re-check all attachment bolts and screws after fitment.

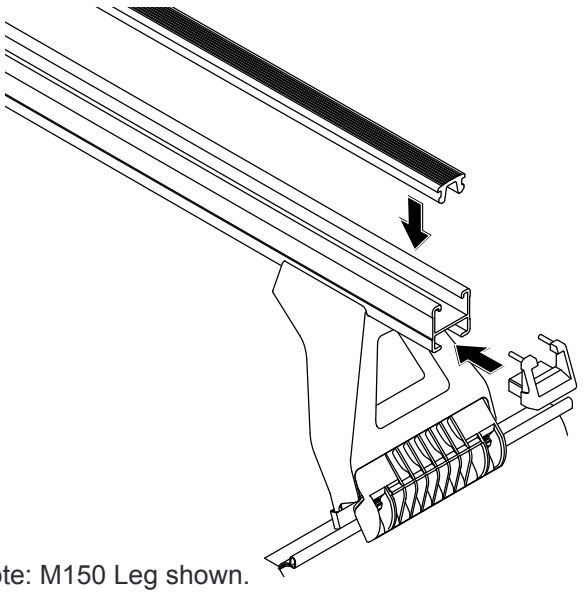

Note: M150 Leg shown.