THE POWER OF REDARC®

TVMS1280

12V 80A Total Vehicle Management System

MODELS:

- **TVMS1280**



AUSTRALIAN MADE®

WARNINGS & SAFETY INSTRUCTIONS

SAVE THESE INSTRUCTIONS — this manual contains important safety instructions.

Do not operate the system unless you have read and understood this manual.

REDARC recommends that the products referenced in this manual be installed by a suitably qualified person.

Disclaimer: REDARC accepts no liability for any injury, loss or property damage which may occur from the improper or unsafe installation or use of its products.

SAFETY MESSAGE CONVENTIONS

Safety messages in this manual include a signal word to indicate the level of the hazard as follows:

⚠ **WARNING**	Indicates a potentially hazardous situation which **could result in death or serious injury to the operator or to bystanders.**
⚠ **CAUTION**	Indicates a potentially hazardous situation which **may result in moderate or minor injury to the operator or to bystanders.**
NOTICE	Indicates a situation that **may cause equipment damage.**

IMPORTANT SAFETY INSTRUCTIONS

⚠ WARNING

1. **THESE PRODUCTS SHOULD NOT BE USED FOR ANY MEDICAL PURPOSES, LIFE SUSTAINING EQUIPMENT, SAFETY APPLICATIONS, OR ANY APPLICATION WHERE EQUIPMENT FAILURE CAN CAUSE INJURY, DEATH, FIRES OR ANY OTHER HAZARD.**
2. **READ ALL MANUALS, AND THESE WARNINGS AND INSTRUCTIONS CAREFULLY BEFORE USING THIS PRODUCT. FAILURE TO OBSERVE THESE INSTRUCTIONS PROPERLY, OR IMPROPER USE OF THE REDVISION MOBILE APPLICATION, THE REDVISION CONFIGURATOR APPLICATION, THE REDVISION DISPLAY AND/OR THE REDVISION TVMS, COULD RESULT IN PERSONAL INJURY, INCLUDING DEATH OR DAMAGE TO PROPERTY.**

⚠ CAUTION

1. The Configurator App. allows modification to the core system functionality of your RedVision system; only use this app. if you have read and fully understand all the instructions in this manual. Changing configuration via wiring changes and/or using the configurator app. could result in removal of safety features intended to prevent operation of external lights or mechanical devices while the vehicle is in motion, leading to hazardous or fatal consequences.
2. Risk of explosive gases: Working in the vicinity of a battery is dangerous. Batteries may generate explosive gases during normal operation. For this reason, it is of utmost importance that you follow the instructions each time you use the system. Prevent flames and sparks, and provide adequate ventilation, especially during charging.
3. Do not install this product in the same compartment where flammable materials, such as petrol/gasoline or Liquefied Petroleum Gas (LPG) are stored.
4. The system should not be used by persons under the age of 18, or those with reduced physical, sensory or mental capabilities, or lack of experience and knowledge, unless they are supervised or have been instructed on how to use the appliance by a person responsible for their safety. Persons under the age of 18 should be supervised to ensure that they do not play with the system.
5. Do not operate the TVMS Display or the Mobile Application to control movable items whilst under the influence of alcohol or drugs. Doing so may result in personal injury or property damage.
6. Do NOT alter or disassemble the system under any circumstances. All services or repairs must be returned to REDARC for repair. Incorrect handling or reassembly may result in a risk of electric shock or fire and may void the unit warranty.

7. Use of an attachment not recommended or sold by REDARC may result in a risk of fire, electric shock, or injury to persons.
8. Cable and fuse sizes are specified by various codes and standards which depend on the type of vehicle the system is installed into. Selecting the wrong cable or fuse size could result in harm to the installer or user and/ or damage to the TVMS or other equipment installed in the system. For this reason, do not replace fuses with ones of higher amperage ratings. The installer is responsible for ensuring that the correct cable and fuse sizes are used when installing this system.
9. Do not drop metal tools onto a vehicle battery. Doing so might cause the battery to spark or might short-circuit the battery or other electrical parts that may cause an explosion.
10. Remove personal metal items such as rings, bracelets, necklaces, and watches before working with a vehicle battery. A vehicle battery can produce a short-circuit current high enough to weld a ring or the like to metal, causing a severe burn.
11. **NEVER SMOKE OR ALLOW A SPARK OR FLAME NEAR A BATTERY AS THESE MAY CAUSE THE BATTERY TO EXPLODE. TO REDUCE THE RISK OF A SPARK NEAR A BATTERY WHEN CONNECTING THE BATTERY INSTALLED IN A VEHICLE TO THE TVMS, ALWAYS DO THE FOLLOWING:**

    Wire the Output Connector before connecting it to the Distribution Box. During connection of the unit, the Battery Output (positive) must be connected first, followed by the Ground (chassis) terminal. The chassis connection should be made away from the battery and fuel lines. Once all connections are wired to the Output Connector, plug the connector into the Distribution Box.
12. Do not use this product to control safety critical devices or those that could cause harm if operated remotely (for example fume exhaust fans or lifters). Only operate devices with moving parts when you have a clear line of sight to the moving parts.
13. Ensure that the Display is not mounted in vehicle head-impact zones. Doing so may result in injury to the driver and/or passenger in the event of an accident.
14. Ensure the Display is not mounted where it may distract the driver of the vehicle. Distracting the driver may result in an accident.
15. Risk of damage to the system. Do NOT connect a load negative (–) to the chassis AND to the applicable negative (–) output channel as this may cause damage to the Distribution Box under some circumstances. Connect to the applicable negative (–) output channel OR a suitable chassis grounding point to avoid damage.
16. Risk of damage to the system. When using REDARC RS/RS2 Series inverters, do NOT connect to the 'TRC' socket at the front (mains end) of the inverter as this will cause damage to the RedVision Distribution Box. Connect to the 'REMOTE' socket to avoid damage.

NOTICE

1. Do NOT connect computers or IT equipment to the RJ45 ports on the RedVision Distribution Box or Display. Damage may occur.
2. It is recommended to leave the Display connected at all times to the base unit.
3. The Distribution Box may be mounted in any orientation but must be mounted onto a flat, solid surface using 4 x M6 screws or bolts. Failure to adequately mount the unit, such as using adhesives to mount the unit will result in unreliable operation of the Distribution Box.
4. It is the installer's responsibility to ensure their installation complies with any applicable legal and regulatory requirements. Within Australia, installers may wish to consult AS/NZS 3001 as one potentially relevant standard.
5. Ensure that the channel and master override dip-switches are turned off after use to prevent accidental operation of the channel / flattening of either the Starter or Auxiliary battery.
6. The RedVision App and its interactions with RedVision has not been tested on all smartphones available on the market so is not guaranteed to work on all devices. However, the app should work on most phones with Bluetooth® 4.0 (or later) running IOS 11. 1 (or later) or Android 7.0 (or later).
7. Ensure all wiring is firmly secured to the vehicle and not suspended from the water level sensor inputs or other connectors. Excessive loading on these pins may result in damage to the Distribution Box.
8. Specifications subject to change without notice.

CONTENTS

WARNINGS & SAFETY INSTRUCTIONS **2**

INTRODUCTION **8**
- Parts 8
- Specifications 10

INSTALLATION **13**
- System Layout (With REDARC Manager) 13
- Mounting 14
- DC Cable Size Requirements 16
- Digital Inputs/Outputs 17
- Fuses 18
- Battery and Charger Connection 20
- Temperature Sensors 22
- R-Bus Connection (Manager30) 23
- Water Level Sensors 25
- Optional Inverter Connection 26

SYSTEM CONFIGURATION **27**
- The RedVision® Configurator App 27
- Load a Configuration 28
- Configure Charger 28
- Configure Battery Sensor 28
- Configure Distribution Box — Load Disconnect Settings 29
- Configure Distribution Box — Channels 31
- Configure Display — Soft Keys 33
- Configure Display — Home Screen 34
- Configure Display — Status Screen 35
- Configure Display — Temperature Units 36

USER GUIDE **37**
- The Display 37
- Basic Screens 39
- Display Settings 41
- System Settings 42
- BMS Settings 43
- Distribution Box Settings 44
- Fault Display 45

ADDITIONAL INFORMATION **46**
- Checking the Product Serial Number 46
- Compliance Information 47

LIMITED WARRANTY **48**

DISPLAY MOUNTING TEMPLATE **49**

TVMS1280

12V 80A Total Vehicle Management System

The RedVision Total Vehicle Management System (TVMS) sets an unprecedented level of automation in the recreational vehicle industry by allowing users to control multiple on-board devices with one easy to use system. RedVision acts as a central hub that connects devices and displays vital information for the vehicle and its on-board accessories. RedVision allows the user to turn lights, REDARC inverters, water pumps and other loads such as televisions, electric steps and fridges on or off, while displaying water levels, temperature, energy (battery power) consumption and storage*1.

WHY USE REDVISION?

- Integration service provided to OEM's to make the most of the product and our manufacturing experience
- Configurable software to meet the specification of different vehicles
- REDARC reliability, warranty, and after-sales service

FEATURES

- Read up to two temperatures
- Read up to six water tanks
- Control inverter*2
- View battery charging, load, and condition information*3
- Switch up to 10 outputs
- Fuse up to 10 circuits plus charger circuit
- Automate output functionality
- Works with a range of REDARC charging systems

CUSTOMER BENEFITS OF REDVISION

- Modern, user friendly interface
- Wireless information and control from a mobile device/smartphone
- Easy to understand simple system layout
- Feature expandability after sales
- REDARC quality

OEM BENEFITS OF REDVISION

- Feature expandability for vehicle customisation to customer order
- Easily up sell value add components such as inverters
- Decreased installation time and complexity
- Reduced weight and area of components
- Improved service and support
- Packaged pricing and delivery
- Decreased production time
- Differentiation against lower cost, lower tech, competitors

*1 Energy consumption and information storage data available when used with a REDARC BMS.
*2 When used in conjunction with a REDARC RS Series Inverter.
*3 When used in conjunction with a REDARC Manager.

MORE LANGUAGES AVAILABLE

CANADA (FR):



N'installez pas ou n'utilisez pas le produit RedVision avant d'avoir lu et compris le manuel d'installation et d'utilisation du système. REDARC recommande que le système soit installé par une personne dûment qualifiée. Une copie en français de ce manuel peut être obtenue en scannant ce code QR, en visitant le site **www.redarcelectronics.com**, en envoyant un e-mail à **power@redarcelectronics.com** ou en appelant le +1 (604) 260-5512.

MEXICO (ES):



No instale ni utilice el producto RedVision (TVMS: Sistema de gestión total de vehículos) hasta que haya leído y comprendido el Manual de instalación y funcionamiento del sistema. REDARC recomienda que el sistema sea instalado por una persona debidamente calificada. Puede obtener una copia de este manual en español escaneando este código QR, visitando **www.redarcelectronics.com**, enviando un correo electrónico a **power@redarcelectronics.com** o llamando al +52 (558) 526-2898.

COMPATIBLE REDARC DEVICES

REDARC Part Number	Device Connection Wire	Further Information
DC/DC Chargers (BCDC)		
BCDC1220	N/A	'BCDC Connection' (page 21)
BCDC1220-IGN		
BCDC1225D		
BCDC1240D		
Battery Management Systems (The Manager)		
BMS1215S3	CAN/R-BUS	'Battery and Charger Connection' (page 20) 'Manager30 Connection' (page 20) 'R-Bus Connection (Manager30)' (page 23)
BMS1230S2		
BMS1230S3		
240V Inverters* (RS/RS2 Series)		
R-12-350RS, RS2	REMOTE (NOT 'TRC')	'Optional Inverter Connection' (page 25)
R-12-700RS		
R-12-1000RS		
R-12-1500RS		
R-12-2000RS, RS2		
R-12-3000RS		

* Available in Australia and New Zealand only.

INTRODUCTION

PARTS

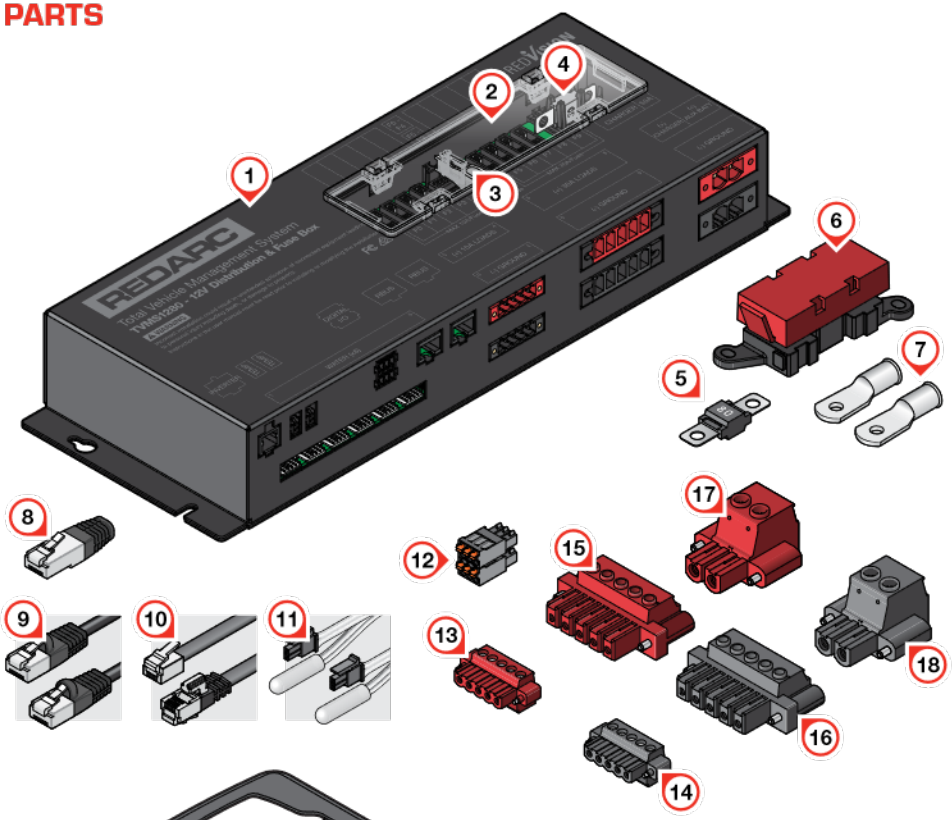



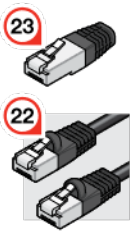

Water Level Sensor Connectors are not supplied. Interface is compatible with **AMP-171822-5**

DISTRIBUTION BOX (TVMS1280-DB)

Ref.	Part	Qty.
1	**Distribution box**	**1**
2	Fuse cover panel (fitted)	1
3	Fuse puller tool (fitted)	1
4	50 A MIDI fuse (fitted)	2
5	80 A MIDI fuse	1
6	MIDI fuse holder	1
7	Lugs (4 AWG, M5 stud)	2
8	RJ45 R-Bus Terminating Resistor	1
9	RJ45 R-Bus Cable — 1 m (3") Black	1
10	RJ12 REDARC Inverter Remote Cable — 3 m (9'10")	1
11	Temperature Sensors — 3 m (9'10")	2
12	Digital Input mating connector	1
13	10 A Output Connector — Red	1
14	10 A Output Connector — Black	1
15	30 A Output Connector — Red	1
16	30 A Output Connector— Black	1
17	Power Connector — Red	1
18	Power Connector — Black	1

DISPLAY (DISP4300)

Ref.	Part	Qty.
19	4.3" Display (DISP 4300)	1
20	Optional Mounting Spacer	1
21	Display Fascia	1
22	RJ45 R-Bus Cable — 1 m (3") Black	1
23	RJ45 R-Bus Terminating Resistor	1

SPECIFICATIONS

ELECTRICAL SPECIFICATIONS

System Voltage	12 V ⎓
Maximum Charger Current	40 A
Maximum Battery Current	80 A
No. Switched Circuits	5 × 10 A Max, 5 × 30 A Max

COMPLIANCE

Regulatory	
Safety	EN 61010.1
Environmental	RoHS Compliant REACH Compliant

GENERAL SPECIFICATIONS

	Distribution Box	**Display**
Operating Temperature	–20°C to +60°C (–4°F to +140°F)	–20°C to +75°C (–4°F to +167°F)
Storage Temperature	–40°C to +85°C (–40°F to +185°F)	–40°C to +85°C (–40°F to +185°F)
Dimensions	385 × 138 × 58 mm (15.2" × 5.4" × 2.3")	178 × 108 × 26 mm (7.0" × 4.3" × 1.0")
Product Weight	2.0 kg (4 lb 7 oz)	0.3 kg (11 oz)
Warranty	2 years	

DIMENSIONS

DISTRIBUTION BOX DIMENSIONS

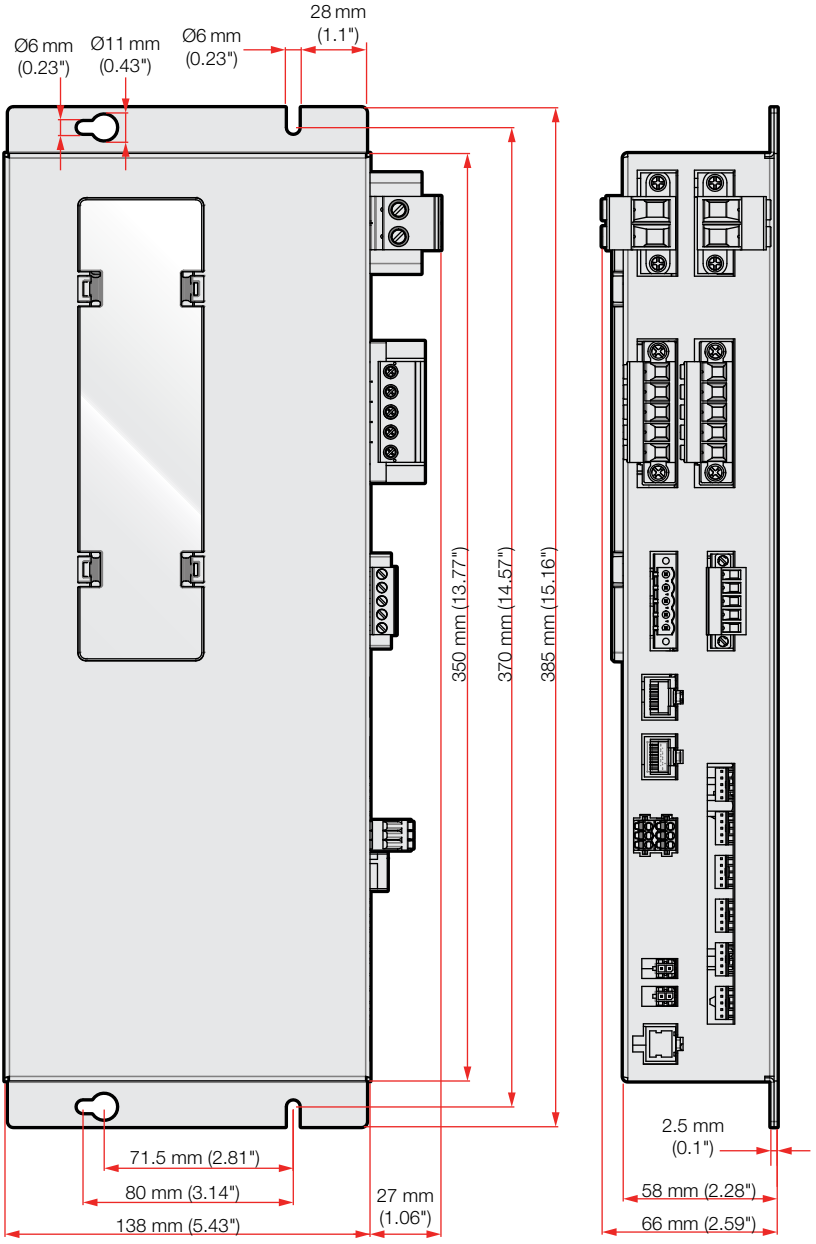

DISPLAY DIMENSIONS

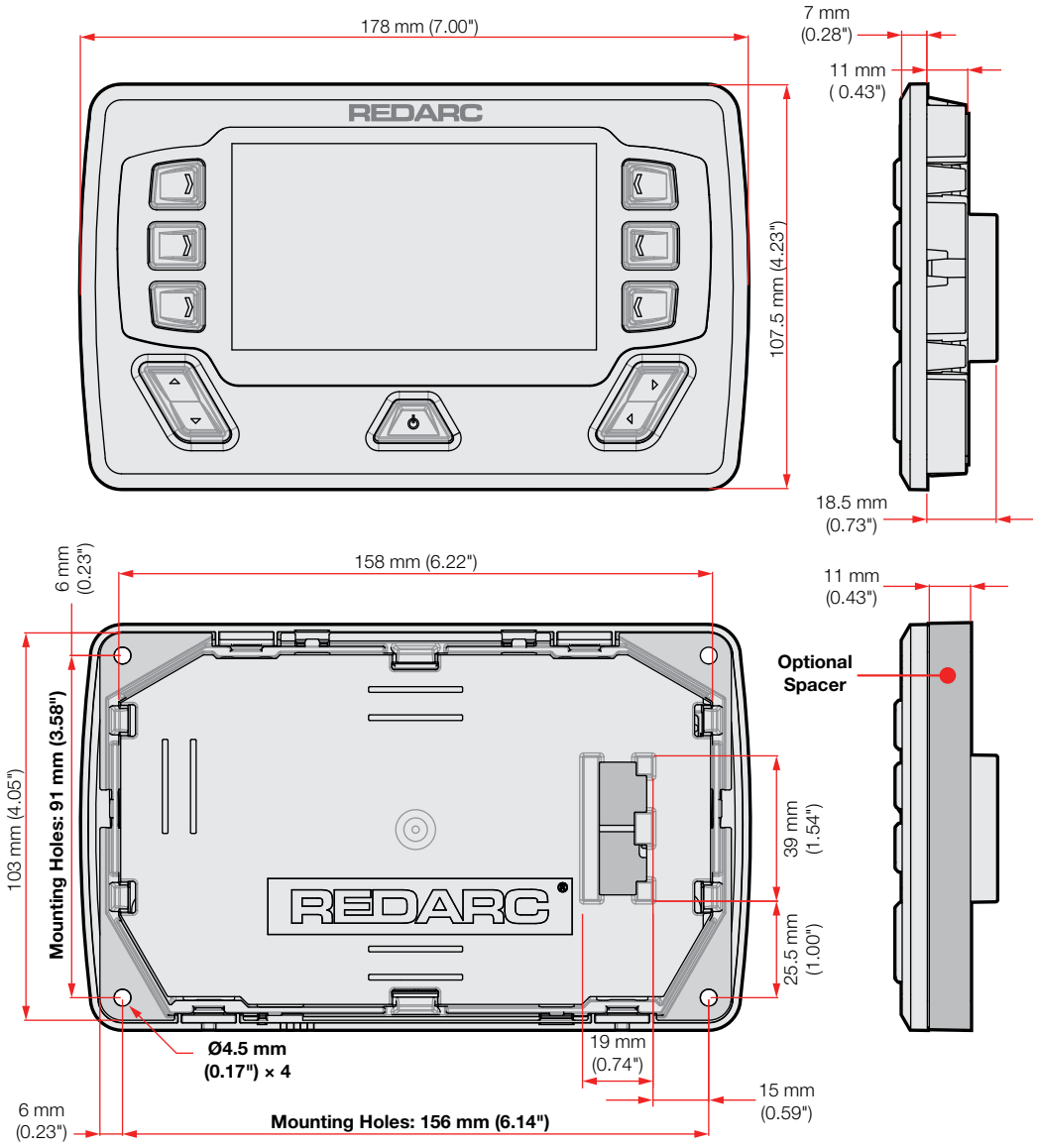

INSTALLATION

⚠ CAUTION

Do not use this product to control safety critical devices or those that could cause harm if operated remotely (for example fume exhaust fans or lifters).

SYSTEM LAYOUT (WITH REDARC MANAGER)

See the Manager30 manual for full wiring details.

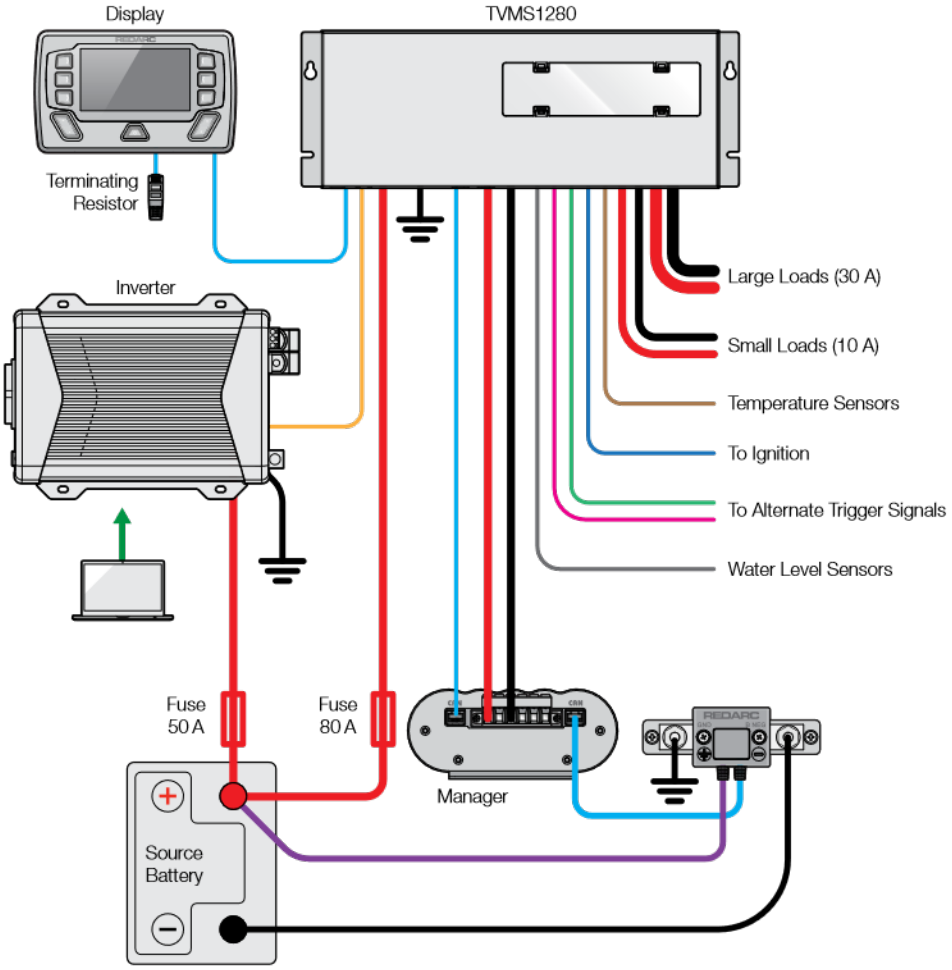

MOUNTING

The Distribution Box should be mounted as close as possible to the source battery(s) and Battery Charger to avoid voltage drop.

MOUNTING THE DISTRIBUTION BOX

The Distribution Box may be mounted in any orientation but must be mounted onto a flat, solid surface using 4 × M6 (or 14G) screws or bolts. Failure to adequately mount the unit, such as using adhesives to mount the unit may result in unreliable operation of the Distribution Box. Ensure clear access to the fuse panel to ensure service of fuses and override of channels can be performed.

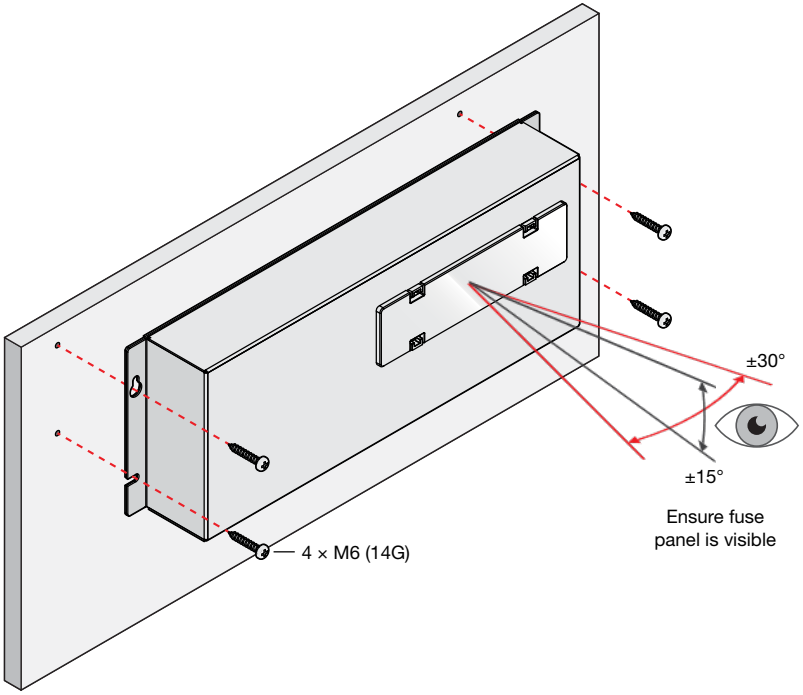

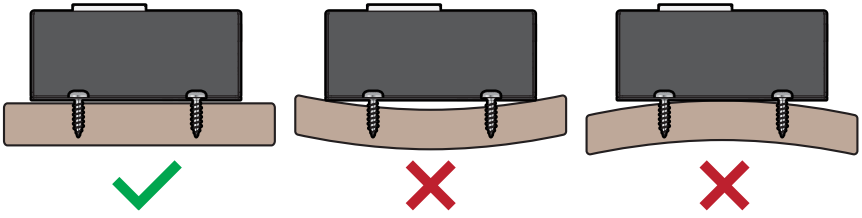

MOUNTING THE DISPLAY

The full-size Display Mounting Template is located on page 49.

The Display should be mounted on a flat, solid surface in a sheltered location, ideally inside the vehicle. It is acceptable to mount the Display in any location that it is protected from harsh environmental conditions such as rain, dust or constant direct sunlight.

⚠ CAUTION

Ensure that the Display is not mounted in vehicle head-impact zones. Doing so may result in injury to the driver and/or passenger in the event of an accident.

Ensure the Display is not mounted where it may distract the driver of the vehicle. Distracting the driver may result in an accident.

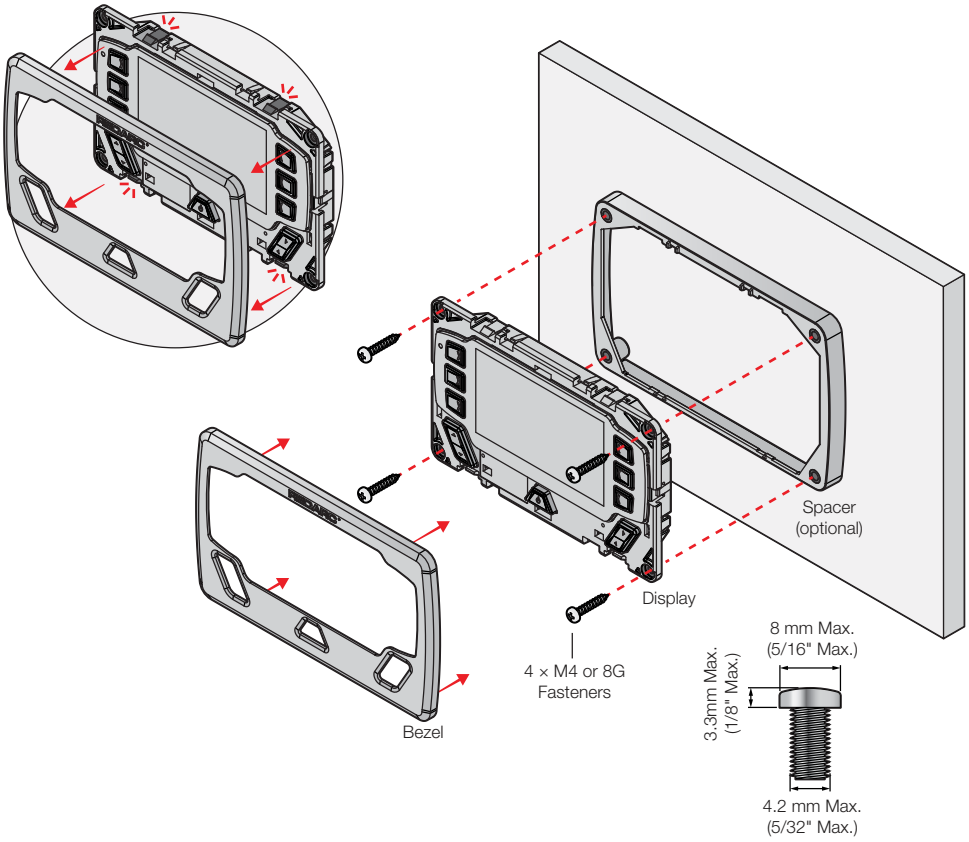

REMOVING THE DISPLAY FASCIA

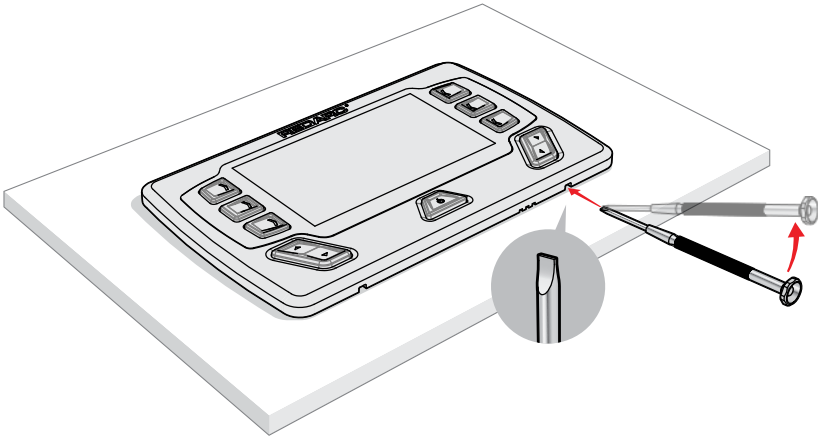

DC CABLE SIZE REQUIREMENTS

INPUT WIRE SIZE

This section provides cable sizing for the Battery and Charger connections detailed in 'Battery and Charger Connection' (page 20). REDARC recommends the installer use cabling between 8 and 4 AWG automotive. Refer to the table below for further information. Note: AWG and B&S wiring standards are identical.

Connection	Terminal Size	Max Cable Size	Cable Size: length < 3 m	Cable Size: length > 3 m
Manager30 Connections	16 mm²	4 AWG	8 AWG	6 AWG
Auxiliary Battery Connections	16 mm²	4 AWG	6 AWG	4 AWG

OUTPUT WIRE DIAMETER SELECTION

REDARC recommends the installer use suitably rated cable and fuses for the load connected. Refer to the table below for the 10 and 30 A connector terminal sizes and maximum cable sizes.

Connection	Terminal Size	Max Cable Size
10 A Circuits	2.5 mm²	10 AWG / 6 mm Auto
30 A Circuits	6.0 mm²	8 AWG

DIGITAL INPUTS/OUTPUTS

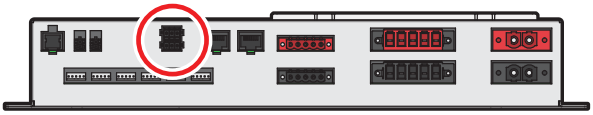

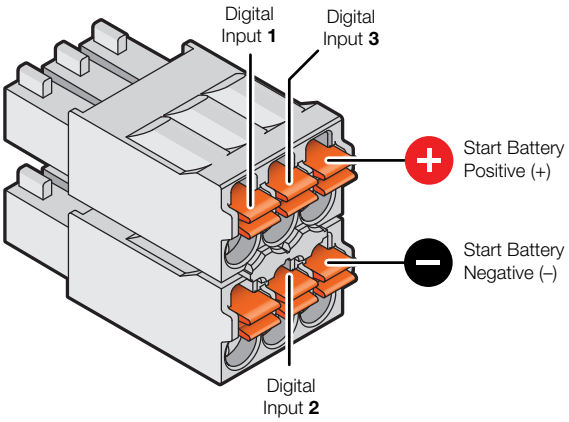

The Distribution Box incorporates 3 digital inputs.

The Digital Inputs (1, 2, and 3) can be configured to switch Distribution Box output loads On/Off when triggered (for example, to turn off all loads except a fridge when the vehicle ignition is on).

The Start Battery Positive (+) and Start Battery Negative (–) inputs can be used to monitor and display a voltage from an external source (for example, to display the vehicle's starter battery voltage).

FUSES

FUSE LOCATIONS

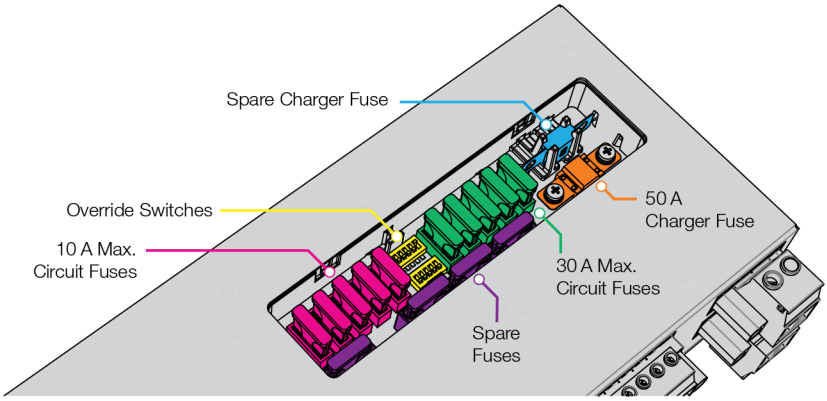

The Distribution Box load output channels are protected by standard blade fuses located in the fuse panel. Additionally 1 × 80 A Battery Fuse and Fuse Holder are supplied.

Qty.	Part	Type	
5	10 A Max. Loads	Blade	Fuses Not Supplied
5	30 A Max. Loads	Blade	Fuses Not Supplied
4	Spare Fuse Holders	Blade	Fuses Not Supplied
1	50 A Charger Fuse	MIDI	Supplied
1	Spare Fuse Holder	MIDI	Supplied

To protect the Distribution Box from harsh startup currents, inductive type loads (e.g. large fridges, pumps and motors) should be connected through the 30 A Max circuits.

LOAD NEGATIVES

Wire each load positive (+) and negative (–) to the applicable output channel. Alternatively, load negatives may be connected at a suitable chassis grounding point.

⚠ CAUTION

Risk of damage to the system. Do NOT connect a load negative (–) to the chassis AND to the applicable negative (–) output channel as this may cause damage to the Distribution Box under some circumstances. Connect to the applicable negative (–) output channel OR a suitable chassis grounding point to avoid damage.

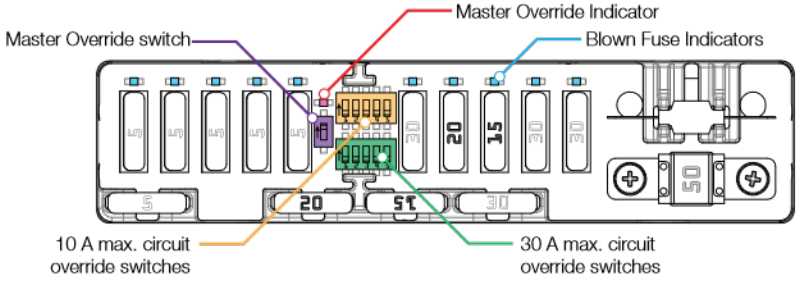

Note: Fuse values may vary from those shown in this diagram, depending on individual system requirements

BLOWN FUSE INDICATORS

A blown fuse is indicated by an illuminated indicator (white) above the blown fuse. Investigate and rectify the cause of the failure before replacing with an appropriately sized fuse. The blown fuse will also be indicated by the icon on the display turning RED.

OVERRIDE SWITCHES

Under normal conditions each load output channel may be switched using the display, however should a load need to be manually switched on, the override switches (located between the two fuse banks) may be used.

Overriding is a two stage process - firstly override mode must be enabled using the master override switch (located to the left of the two switch banks). The master override indicator (red) will illuminate to denote that override mode is enabled. Once enabled, the individual load channels may be operated using the relevant switches. During override the system cannot be controlled by the display or the app.

NOTICE

Ensure that the channel and master override switches are turned off after use to prevent accidental operation of the channel and/or flattening of either the Starter or Auxiliary battery.

BATTERY AND CHARGER CONNECTION

The Distribution Box is intended to be used in conjunction with the Manager30, but alternatively, it can be used with a REDARC BCDC charger.

BATTERY CONNECTION

Wire the Auxiliary Battery Positive (+) to the Distribution Box through the supplied 80 A MIDI fuse — this fuse should be mounted as close as practical the battery. For cable sizing, refer to 'DC Cable Size Requirements' (page 16).

Wire the distribution box Battery Ground (–) to either a suitable grounding point (i.e. chassis or earth stud) or connect directly to the GND (⏚) terminal of the Manager's battery sensor.

MANAGER30 CONNECTION

If using a Manager, it should be mounted as close as possible to the Distribution Box. Connect the Battery Management System's battery output positive (+) and Ground (⏚) to the Distribution Box Charger (+) and Ground (–) connections.

For Cable sizing, refer to 'DC Cable Size Requirements' (page 16).

The Distribution Box includes a 50 A MIDI fuse to protect the charging circuit (the maximum charging current is 40 A). Refer to 'Fuses' (page 18) for further information.

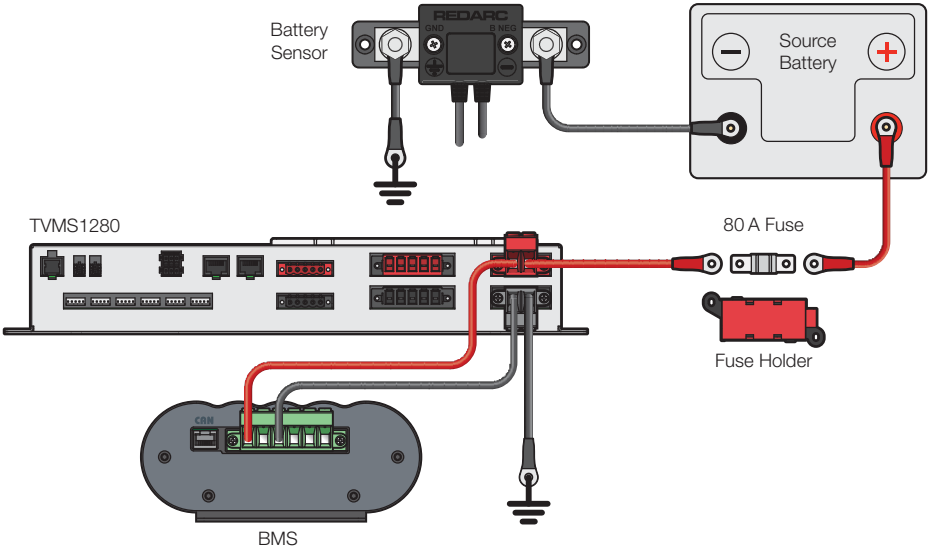

BCDC CONNECTION

If using a BCDC, it should be mounted as close as possible to the Distribution Box. Connect the BCDC's battery output positive (+) and Ground (⏚) to the Distribution Box Charger (+) and Ground (–) connections. For Cable sizing, refer to 'DC Cable Size Requirements' (page 16).

The Distribution Box includes a 50 A MIDI fuse to protect the charging circuit. Refer to 'Fuses' (page 18) for further information. The following wiring diagram is applicable for BCDC chargers rated at 40 A and below.

Higher current chargers requiring a fuse larger than 50 A should be connected directly to the Auxiliary Battery with appropriate fusing and not via the Distribution box.

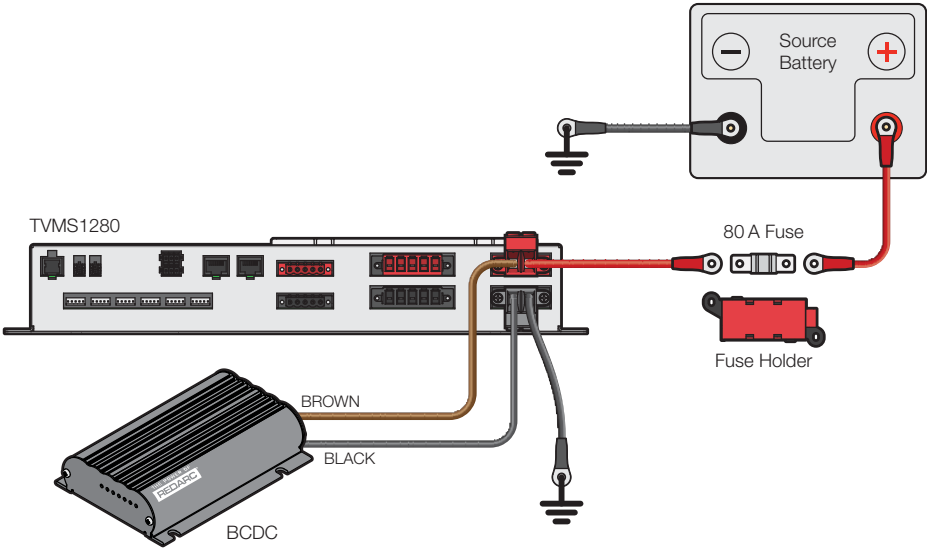

TEMPERATURE SENSORS

Two 3 metre (10-ft) temperature sensors are included with TVMS1280 and are able to sense from –40°C to +80°C (–40°F to +176°F). The two supplied temperature sensors may be added to the system by simply plugging into the two interfaces on the Distribution Box.

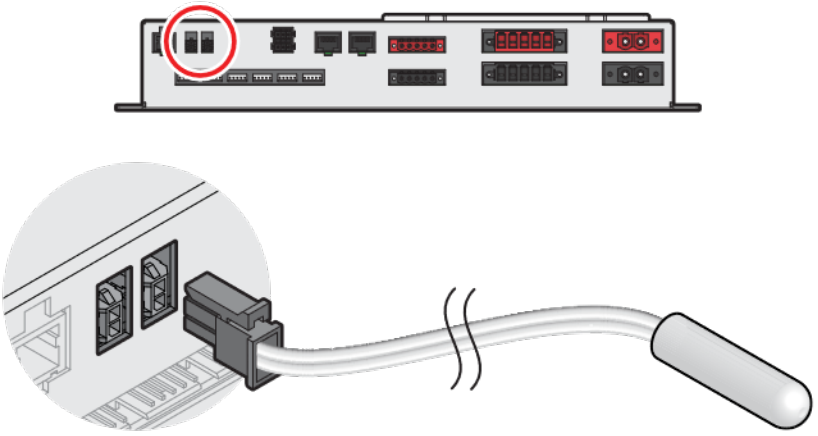

R-BUS CONNECTION (MANAGER30)

CONNECTING THE REDVISION R-BUS

RedVision uses an R-Bus communication system to link components.

1. Use the supplied 1 metre (3'3") RJ45 cable to connect the Battery Management System to either of the sockets on the Distribution Box.
2. Use the 5 metre (16'5") RJ45 cable to connect the remaining socket on the Distribution Box to the Display.
3. Fit the Terminating Resistor to the remaining socket in the Display.
4. When a Manager30 is used, the terminating resistor for the other end of the Bus is inbuilt in the Battery Sensor. If a Manager30 is not used, the supplied terminating resistor should be inserted into one of the ports on the TVMS1280 Distribution Box.
5. If using a BMS1230S2, BMS1230S2-NA,or BMS1215S3, connect to the RedVision and Battery Sensor by using the T-Piece supplied with the Manager.

CAN Bus Connection — BMS123S3R

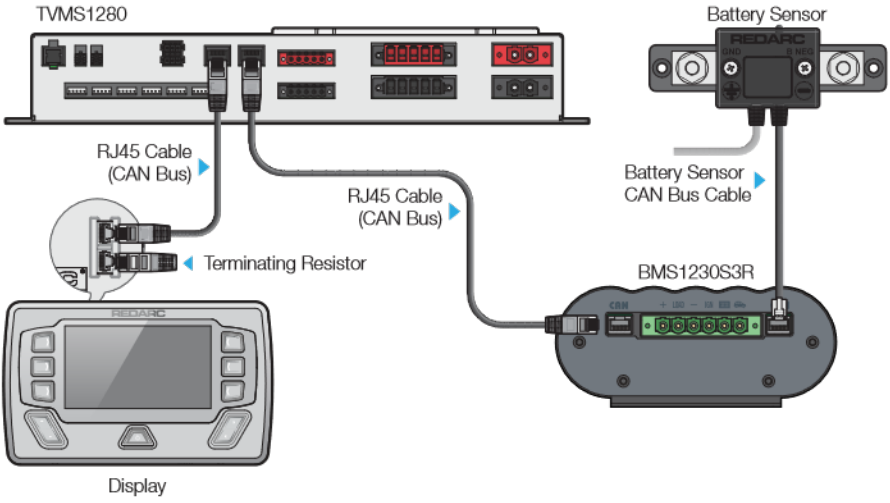

CAN-Bus Connection — BMS1230S2 / BMS1230S2-NA / BMS1215S3

Some Manager models do not have a second R-Bus port. A T-piece must be used to connect the BMS and the Battery Sensor to the TVMS1280.

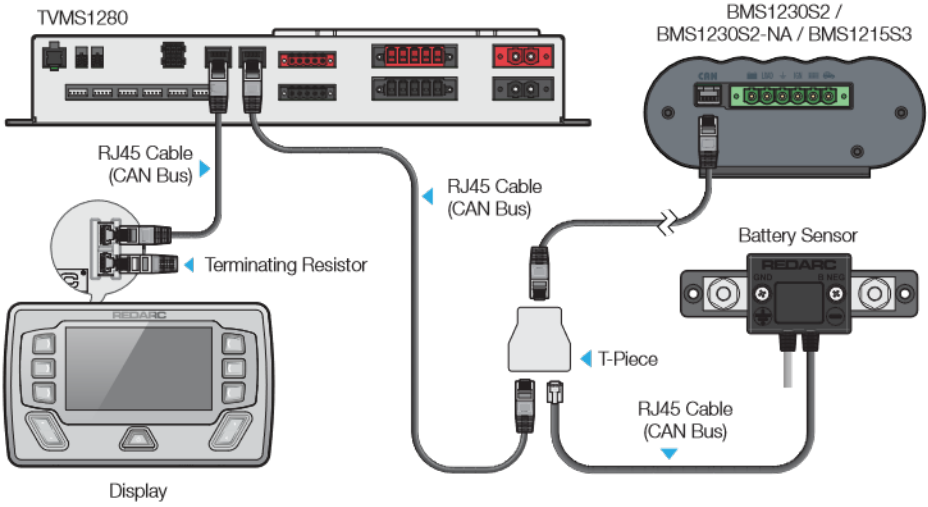

ABOUT TERMINATING RESISTORS

R-Bus and CAN Bus (Controller Area Network) systems connect devices in a continuous daisy-chain network. Terminating Resistors must be present at each end of the daisy-chain to complete the CAN Bus system.

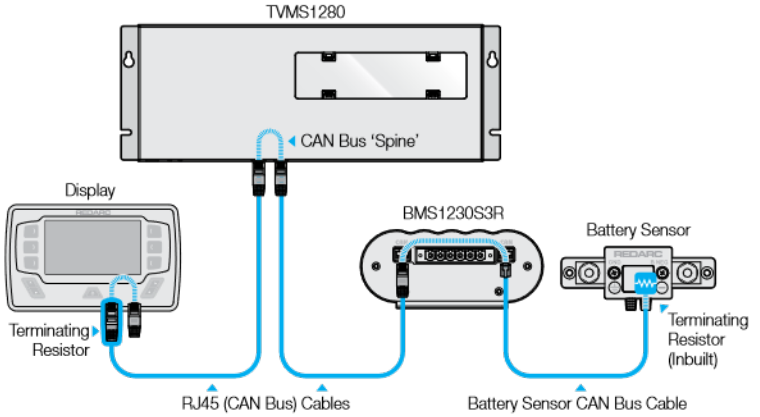

WATER LEVEL SENSORS

Up to six water level sensors may be connected to the Distribution Box.

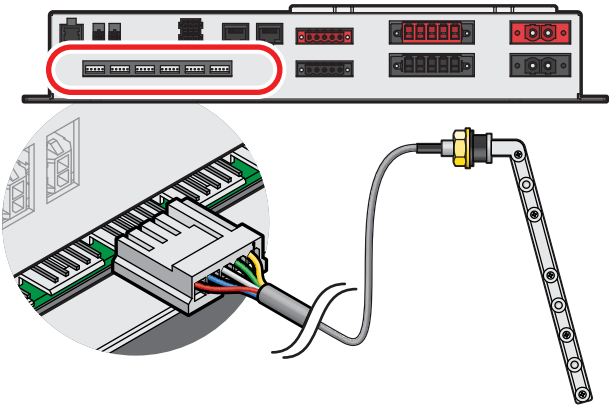

2–5 PIN TANK SENDERS

Most 2–5 pin conductive tank sensors can be used in conjunction with an **AMP-171822-5** connector (not supplied). To use, wire as shown (Note: wire colours may vary — refer to the manufacturer's specification sheet).

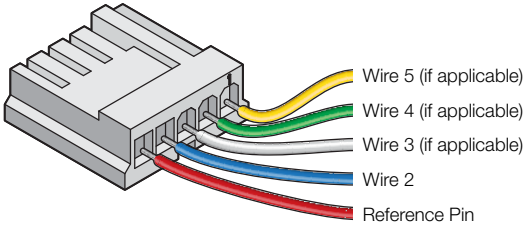

RV ELECTRONICS 5 PIN TANK SENDERS

The Distribution Box has direct compatibility with sensors from RV Electronics that are common in Australia, including SP0004, SP0011 and SP0028.

To use, connect the sender directly to the distribution box inputs.

NOTICE

Ensure all wiring is firmly secured to the vehicle and not suspended from the water level sensor inputs or other connectors. Excessive loading on these pins may result in damage to the Distribution Box.

OPTIONAL INVERTER CONNECTION

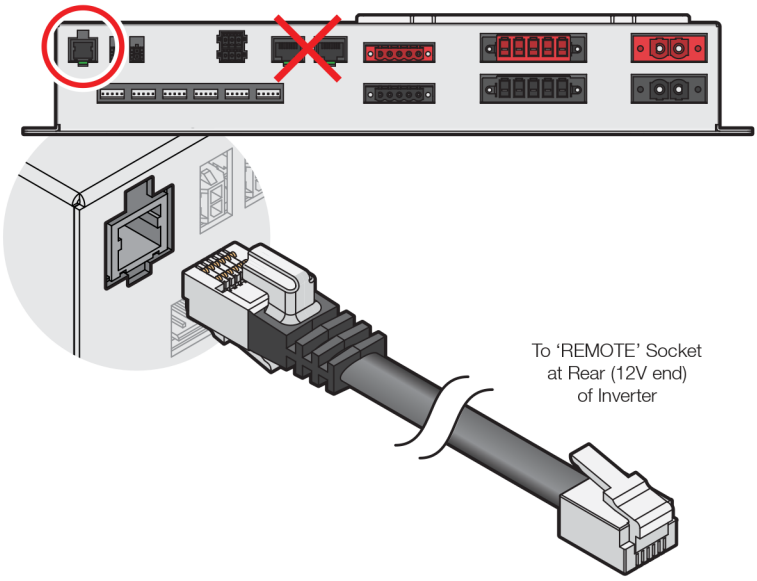

REDARC's RS/RS2-Series inverters may be connected to the Distribution Box to allow the user to switch the inverter on/off, via the Display. The inverter should be mounted as close as possible to the Auxiliary battery (Refer to the inverter's user manual for further installation information including fuse and cable sizing.)

⚠ CAUTION

Risk of damage to the system. Do NOT connect to the 'TRC' socket at the front (mains end) of the inverter as this will cause damage to the RedVision system. Connect to the 'REMOTE' socket to avoid damage.

1. Connect the **non-overmoulded** end of the supplied RJ12 cable to the 'REMOTE' interface at the **rear (12V end)** of the inverter.
2. Connect the over-moulded end of the supplied RJ12 cable to the to the inverter input of the Distribution Box.
3. Connect the Inverter DC supply to the battery, NOT a load output of the Distribution Box.

SYSTEM CONFIGURATION

THE REDVISION® CONFIGURATOR APP

A range of REDARC products including TVMS1280 are compatible with the RedVision® Configurator App (iOS and Android). Multiple RedVision®-compatible products can be paired via Bluetooth® to your smartphone simultaneously.

Use the app to set-up or customise the settings of your TVMS1280.

GET THE REDVISION® CONFIGURATOR APP

Download the free REDARC RedVision® Configurator App to Configure the settings of your TVMS1280 using your smartphone via Bluetooth®.

The RedVision® App and its interactions with the TVMS1280 have not been tested on all smartphone models. Visit the application pages within your App store to view compatibility details.

⚠ WARNING

When using the REDARC Configurator App, ensure that you do not configure important vehicle safety features (such as lights or mechanical devices) in such a way that they may turn Off/On unintentionally while the vehicle is in motion.

Changing configuration via wiring changes and/or using the Configurator App could result in removal of safety features intended to prevent operation of external lights or mechanical devices while the vehicle is in motion, leading to hazardous or fatal consequence.

NOTICE

- The Configurator App allows modification to the core functionality of your RedVision® system. Only use this app if you have read and fully understand all instructions in this manual.
- Ensure that the channel and master override switches are turned off after use to prevent accidental operation of the channel / flattening of the Source Battery.

LOAD A CONFIGURATION



1. Following the Bluetooth® pairing instructions will require selecting your Display. Once successfully paired, the App will download your current system configuration, save it and then you should see the RedVision Configurator Main Menu. The App has now downloaded your RedVision system settings which you can now change.
2. Alternatively, you may choose 'Open Configuration' to open a previously saved configuration. Tapping this button will take you to the 'Choose Configuration' screen.
3. From this screen you can select the most recently saved version of your system configuration or automatic backups from all previous changes made from your phone. Selecting a configuration will take you to the RedVision Configurator Main Menu.
4. Finally, once you have defined all your Charger, Battery Sensor, Distribution Box and Display settings, tapping the Program button will re-program your device.

CONFIGURE CHARGER

From the Main Menu, select **Charger**.

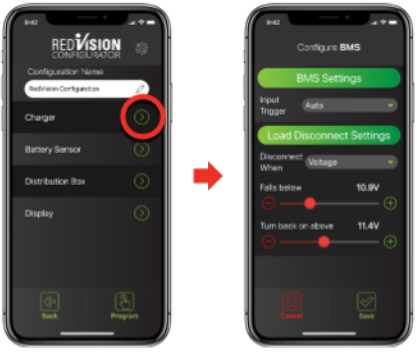

The Configure BMS (Charger) page allows you to setup the Input Trigger and Disconnect When settings for a Manager30. Refer to The Manager instruction manual for more detail on these features.

- The default Input trigger setting is '**Auto**'.
- The default **Disconnect When** setting is '**Always**'.

CONFIGURE BATTERY SENSOR

From the Main Menu, select **Battery Sensor**.

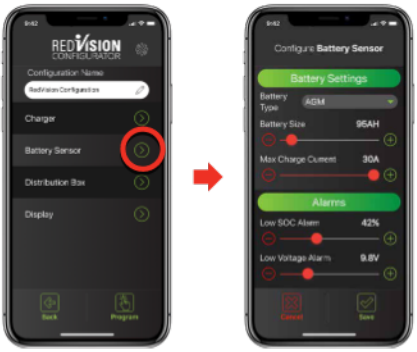

The Configure Battery Sensor page allows you to set the Battery Type, Size and Maximum Charge Current along with SoC and Voltage alarm levels.

The default settings are:

- Battery Type: **Gel**
- Battery Size: **40 Ah**
- Maximum Charge Current: equal to the maximum output of your Manager (30 A)
- Low SoC Alarm: **10%**
- Low Voltage Alarm: **10.5 V**

For more information, refer to The Manager instruction manual.

CONFIGURE DISTRIBUTION BOX — LOAD DISCONNECT SETTINGS

From the Main Menu, select **Distribution Box** > **Load Disconnect Settings**.



The 'Configure TVMS Disconnect' page allows you to set the Disconnect Triggers for the RedVision system.

LOAD DISCONNECT

When battery level is running low, the Load Disconnect feature preserves battery capacity to prioritise essential loads (e.g. fridge) by disconnecting the 'non-essential' loads that the installer has configured to operate via the Master Switch function.

To enable this feature, the Trigger type must be chosen from the drop down 'Disconnect When' menu, where the following Load Disconnect options are given:

- **Always** — Always Disconnected
- **Voltage** — Triggers based on the voltage at the Batt + terminal on the Distribution Box
- **BMS Voltage**[*1] — Triggers on voltage of the Auxiliary Battery as measured by the Manager
- **BMS SoC**[*1] — Triggers on SoC of the Auxiliary Battery as measured by the Manager
- **Never** (*default*) — Always Connected

Next the Disconnect and Reconnect levels must be set, based on the method selected. The App will ensure that Disconnect is always set 5% or 0.5 V lower than Reconnect.

BATTERY PROTECT*[2]

The Battery Protect feature is designed to prevent over-discharge of lead acid batteries or tripping of lithium batteries internal low voltage disconnect by disconnecting all loads at a user defined 'Voltage' trigger level. The unit will reconnect the loads when the measured voltage rises 0.5 V above the user defined trigger level.

*1 BMS triggers available when installed with a REDARC Manager battery charger.
*2 Available on Distribution Boxes with serial numbers after 21040571770001.

CONFIGURE DISTRIBUTION BOX — CHANNELS

From the Main Menu, select **Distribution Box** > **Channels**

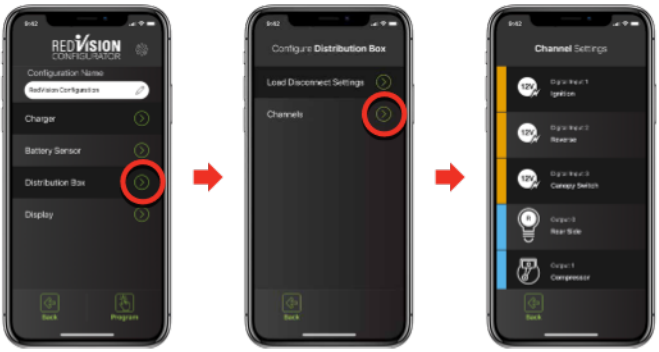

The Channel Settings page allows you to customise each of the connections to your RedVision Distribution Box. Simply put, you can tell RedVision what you have connected to it, and how you want RedVision to control that channel.

There are 5 types of 'Channels' which can be connected to the Distribution Box, each indicated by a different colour.

Digital Inputs — You may choose to use these inputs for vehicle ignition and reverse signals, for example, which will allow certain outputs to be turned ON or OFF automatically

Outputs — These are the 5× 30A and 5× 10A channels which you can control from the RedVision App and Screen

Inverter — This channel controls an Inverter connected to the Optional Inverter Connection on the RedVision Distribution Box

Sensors — These control the 2× Voltage and 2× Temperature sensor connections to the RedVision Distribution Box

Water Tanks — These control the water tank connections to the RedVision Distribution Box.

CHANNEL CONFIGURATION OPTIONS

The Channel Configuration pages allow you to customise each channel. The available options for each channel type vary slightly.

- **Channel Details** — Allows labelling of the channel, enabling of the channel and allows the channel to be given an Icon. Please ensure that 'Channel Enabled' is selected. Some Icons give the option of an overlay, which is a one letter descriptor to differentiate multiple instances of the same type of channel (i.e. water tanks).
- **Input Logic** — Allows definition of the Turn ON criteria for a Digital Input channel.
- **Analog Alarms** — Provides the option of Under or Over Alarms to trigger based on the Input Measurement. These may be Voltage, Temperature or Water Tank Level.
- **Tank Settings** — Allows definition of the Water Tank Level sensing device including the type of probe used and the water type stored in the tank (i.e. Clean, Black, Brown etc.)
- **Inverter Settings** — Allows enabling of Inverter remote control should a REDARC RS series inverter be connected to the 'Optional Inverter Connection' port on the RedVision Distribution Box.

OUTPUT CHANNEL LOGIC CONFIGURATION

From the **Channel Settings Menu**, select the Channel that you wish to modify.

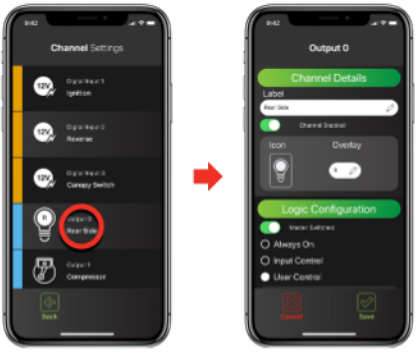

Output Channels are the channels connected to the 5× 30A, 5× 10A and the Inverter connected to the RedVision Distribution Box. Each of these channels must feature a 'Logic Configuration' which defines how the channel behaves.

Master Switched — This switch enables the Master Switch Function for this channel. This switch defaults to ON.

There are three main Logic Configuration types that can be used:

- **Always On** — This will ensure that the selected channel is Always On. This could be used for a fridge, for example, so that you don't accidentally turn it OFF.
  NOTE: This setting will still be controlled by the Master Switch if enabled.
- **Input Control** — This will ensure that the selected channel is ONLY turned ON or OFF with a Digital Input. An example of this is a door switch turning on a light.

- **User Control** — This allows the selected channel to be turned ON or OFF using the Soft Keys on the display or via the Buttons on the App.

  In User Controlled mode, ON only during button press and/or Input Override can be selected. The channel will default to have both of these turned OFF.

  ON only during button press - Allows the channel to only be active while the button/ Soft Key is depressed. This may be used for raising or lowering steps or an awning.
- **Input Override** — Allows the channel to be locked ON or OFF by a Digital Input as well as via User Control.
- **Digital Input Control** — In either Input Control or User Control with Input Override mode, allows definition of the channel function in the instance of a Digital Input Trigger.
- **Override output when** — Defines if the Output is Triggered when the Input is ON or OFF.
- **Override output to** — Defines the state the Output is Triggered to in this instance.
- **After override output** — Defines the return state of the Output after the Trigger is no longer detected.

> ⚠ **CAUTION:** Changing configuration via wiring changes and/or using the Configurator App. could result in removal of safety features intended to prevent operation of external lights or mechanical devices while the vehicle is in motion, leading to hazardous or fatal consequence.

CONFIGURE DISPLAY — SOFT KEYS

From the Main Menu, select **Display** > **Soft Keys**.



More pages can be created and configured by tapping the '+' button at the bottom of the page.

From the Configure Soft Keys page, any *enabled* Output Channel or Inverter Channel can be assigned to a Soft Key. The 6 empty slots shown in this page correspond to the same locations on the RedVision Display once programmed.

SOFT KEY CONFIGURATION

From the Configure Soft Keys Menu, select the slot you wish to set up, then select **choose**.

Select a Channel from the list of available Channels.

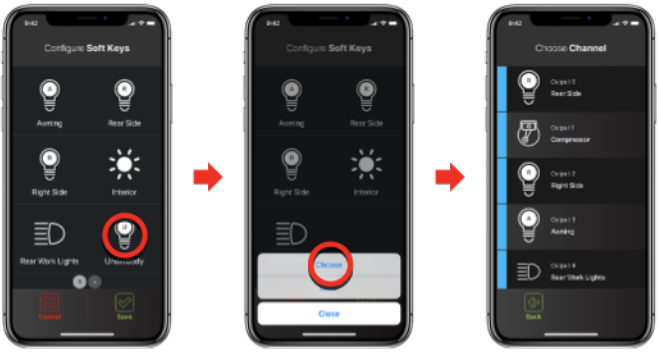

CONFIGURE DISPLAY — HOME SCREEN

From the Main Menu, select **Display** > **Home Screen**.



The Home Screen Settings page allows configuration of the RedVision Display Home Screen.

- **Home Screen Layout** — This drop down menu allows selection of a number of Home Screen combinations. Choose the one that suits your setup OR displays the items that you wish to see on your Home Screen.
- **Temperatures** — These drop down menus allow you to select the Temperature Sensor Channels that appear on the RedVision Display. The first drop down menu selects the Channel that will appear on the left and the second will appear on the right.
- **Water Tank Channels** — This drop down menu allows you to select, and place in order, up to four water tank channels to appear on the RedVision Display Home Screen. These Channels must first be configured.

- **Voltage Channels** — These drop down menus allows you to select the Voltage Sensor Channels that appear on the RedVision Display.

CONFIGURE DISPLAY — STATUS SCREEN

From the Main Menu, select **Display** > **Status Screen**, then Select your Screen or Add a new Status Screen.

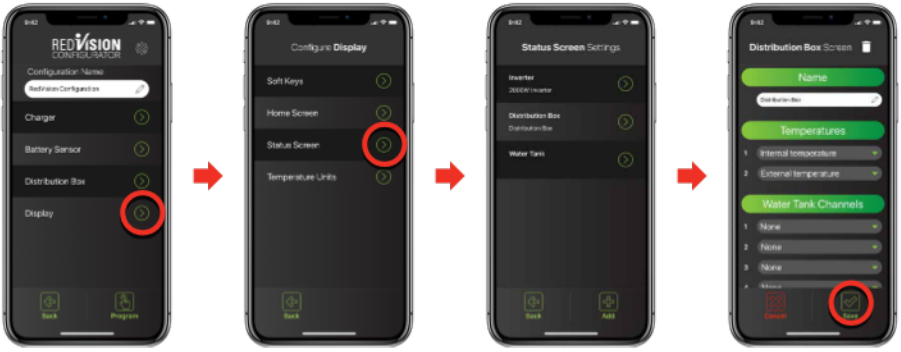

The Status Screen Settings page allows configuration of the RedVision Display Status Screens. These are accessed by pushing the Right Arrow on the RedVision Display.

There are two types of Status Screens which can be added to your Display Menu.

Select add at the bottom of the screen, and choose your screen type, either Distribution Box, or Tanks. You can name the screen and select the information you want to be displayed.

The tank status screen allows you to display two rows of tank levels, up to four on each row. If you only select two on a row, they will appear larger than if three or four are selected.

CONFIGURE DISPLAY — TEMPERATURE UNITS

From the Main Menu, select **Display** > **Temperature Units**.



The Temperature Screen Settings page allows configuration of the RedVision Display Temperature Units. Select if you would like your units displayed in Celsius or Fahrenheit, then select Save.

USER GUIDE

THE DISPLAY



The Display is the main user interface for the RedVision System. It brings information and control to one place without the need for multiple displays and control panels. It is to be mounted in a sheltered location and is the base for control and display for RedVision. It also provides the Bluetooth® interface for the RedVision App.

NOTICE: Do not use chemicals or cleaning products as damage to the unit may occur. Clean using a slightly damp cloth only.

REDVISION QUICK START GUIDE

A Quick Start guide explaining the operation and functions of the Display is included with the Display, appears over the following few pages and may also be found at: http://redarcqr.com/RedVisionQSG

NAVIGATION

The Left/Right buttons are used to navigate the pages on the centre of the screen.

The Up/Down buttons are used to navigate through options found on other pages or to cycle through devices on the Home Page when a Distribution Box is connected.

The Left/Right and Up/Down functions are indicated on the screen.

SOFT KEYS

The Soft Keys functions will be indicated by and icon and these functions will change depending on the screen.

TURNING DISPLAY ON / OFF



Pushing the Power Button ONCE will open a Power Button instruction dialogue and allow switching between Storage and Touring modes.



Pushing the Power Button TWICE will invoke the 'Master Switch' function, when a Distribution Box is installed. This function switches a defined set of devices and can be customised, by the installer, to user specifications.



HOLDING the Power Button will put the screen into Standby mode. Pushing any button will wake the screen up again. When the system is set to 'Storage Mode' only the Power Button will wake the display up.

NOTIFICATION BAR ICONS

The Notification Bar provides a quick overview of your device status connectivity and important information.

	Bluetooth® Connected
	Master Switch Enabled
	Fault Indication
	Load Disconnect Invoked
	Storage Mode Enabled
	Alarm Notification

BASIC SCREENS

HOME SCREEN

The Home Screen shows the system overview in the centre, with connected devices managed by Soft Keys to the left and right. The system overview shows BMS status and Water Tank levels.

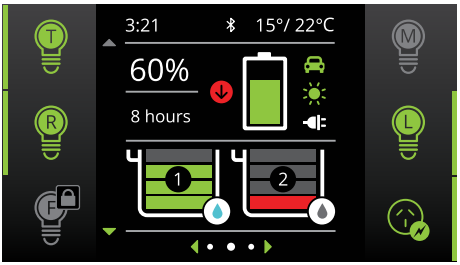

Pushing the Up/Down arrows cycles through all available devices. Pushing Left reveals the Settings menu and Right reveals the information menu.

Note: The information displayed on the home screen may vary depending on the system.

SYSTEM SETTINGS

This menu allows the user to change Display, System, BMS and Distribution Box settings, selected by Soft Key.

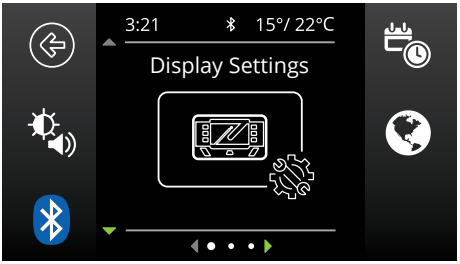

Pushing the Up/Down arrows cycle through the available settings menus. Pushing the top left 'Back' Soft Key will return the user back to the Home Screen.

CHANGING SETTINGS

Once the desired Settings Screen is selected using the Soft Keys, the available settings can be modified. Pushing the Up/Down arrows will cycle through the settings. Pushing the Left/Right arrows will modify the setting.

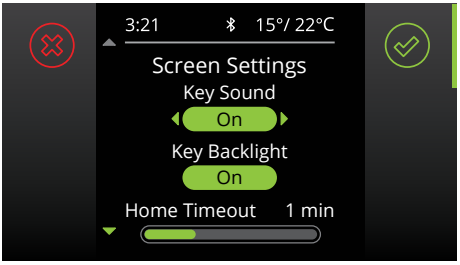

The 'Green Tick' Soft Key will save the adjustment, the 'Red Cross' Soft Key will cancel the changes.

BMS INFORMATION

The BMS information screen provides information on charge stage, current flow, State of Charge (SoC), solar input and battery status (when used with a REDARC Manager).

The Soft Keys on the right link to performance logs for SoC/Day, SoC/Hour and Solar Power input. The Soft Key on the left links to the Charging Source information page. Pushing the down arrow displays the Distribution Box Info. screen (when used with a REDARC RedVision Distribution Box).

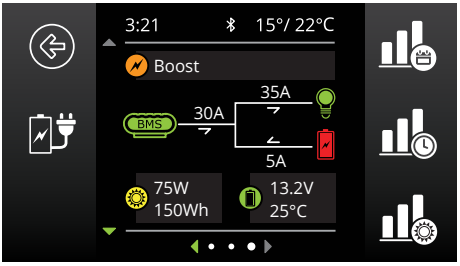

DISTRIBUTION BOX INFORMATION

The Distribution Box information screen provides information on Starter and Auxiliary battery voltages, Water Tank levels and temperatures from the connected probes. Pushing the down arrow will display the level of up to 6 water level tanks if connected.

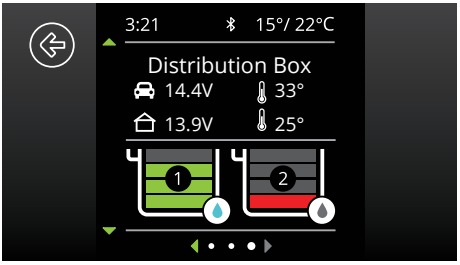

WATER TANK LEVELS

Where there are more Water Tanks sensors connected than showing on the Distribution Box Information page, pushing the down arrow will display the level of ALL connected Water Tank Levels (up to 6 in total).

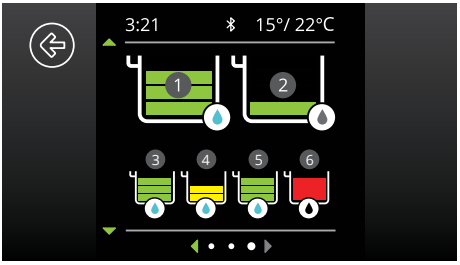

DISPLAY SETTINGS

The Display Settings screen allows setup and modification of Display specific settings.

Factory Settings	
Key Sound	ON
Key Backlight	ON
Home Timeout	1 min
Standby Timeout	1 min
Brightness Minimum	20%
Brightness Maximum	100%
Clock Format	12 Hour

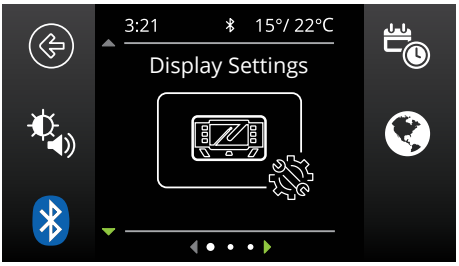

DISPLAY SETTING ICONS

	Returns to the Home Screen.
	Opens the Screen Settings menu. This menu allows switching of Key Sounds and Backlight and modification of Screen Timeouts and Minimum and Maximum Screen Brightness levels.
	Opens the Bluetooth® pairing screen, for connecting of the Display to a standalone device via Bluetooth®.
	Opens the Date and Time settings screen. The user is prompted to enter date and time upon first start-up however should this need to be changed, it can be done in this menu.
	Opens the Regional Settings menu. This menu allows toggle of the Clock format between 12 and 24 hour formats and the Temperature units between Celsius and Fahrenheit.

SYSTEM SETTINGS

The System Settings screen allows modification of the current operating mode as well as providing information on the system and previous fault history.

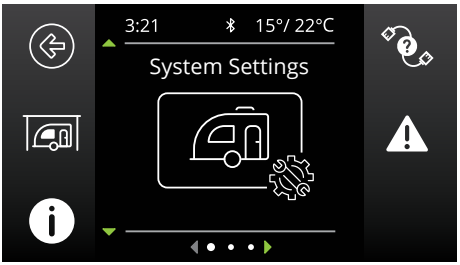

SYSTEM SETTING ICONS

	Returns to the Home Screen.
	This icon links to the System Mode menu. This menu allows switching of the System Mode between Storage and Touring. Storage Mode will switch off all loads and set the Manager into Storage Mode should one be connected.
	Opens the About Us screen. This screen provides contact information for REDARC.
	Opens the RBus Diagnostics screen. This screen provides a serial number for each REDARC device connected to the system. More information on the selected device can be found by clicking the top right Soft Key.
	Opens the Fault History screen. This screen provides a list of the 10 most recent faults. Press the top right Soft Key to see more information on the selected fault.

BMS SETTINGS

When a Battery Management System is connected, the system will allow setup and modification of a number of BMS settings.

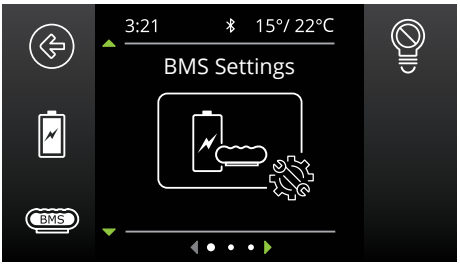

SYSTEM SETTING ICONS

	Returns to the Home Screen.
	Opens the Battery Information screen. This screen allows the user to set their battery type and size. This information is critical for the operation of the Manager product so it is important to ensure this is correct.
	Opens the Charger Settings screen. This screen allows setting of the DC input trigger on the Manager and allows modification of the Low Voltage and SoC alarm levels.
	Opens the BMS Load Disconnect screen. This allows for setting of the Load Disconnect feature on the Manager. **NOTE:** This feature operates similarly but independently to the Distribution Box Load Disconnect feature.

DISTRIBUTION BOX SETTINGS

This Settings screen allows setup and modification of the Distribution Box Load Disconnect feature and provides information on the Distribution Box's channel setup. Distribution Box settings can only be changed by the system installer.

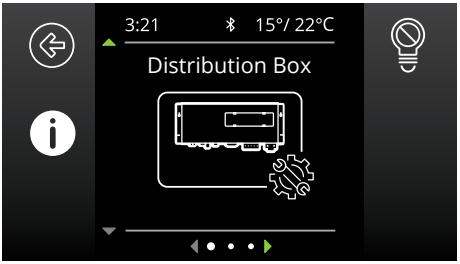

SYSTEM SETTING ICONS

	Returns to the Home Screen.
	Opens the Channel Information screen. This screen provides information on the devices connected to the 22 available channels (input and output) on the Distribution Box. Clicking the top right button will display more information
	Opens the RedVision Load Disconnect screen. This screen allows setting of the Load Disconnect type (based on SoC or Voltage) and the Disconnect and Reconnect levels

FAULT DISPLAY

Fault screens will be shown if either an output fuse is blown, the Manager has a fault, or if the unit encounters a switching fault.

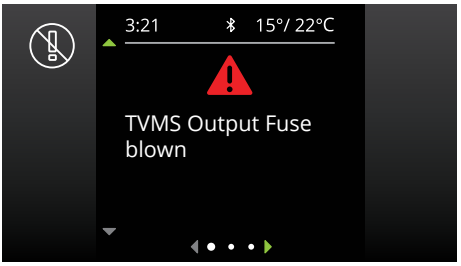

FUSE FAULTS

When a fuse fault is detected (i.e., a fuse is blown) the output channel will be turned off and the corresponding icon on the display will be shown in red. Additionally the LED adjacent to the fuse will illuminate as described in 'Blown Fuse Indicators' (page 19). The fault will clear automatically once the fuse is replaced.

SWITCHING ERRORS

A switching error indicates one of the 10 A outputs is overloaded. In the event that a switching error is detected, the relevant output channel will be turned off and the corresponding icon on the display will be shown in red, and the message “TVMS output channel over temperature” will be displayed.

After 60 seconds, the channel will be turned ON again:

- If the error has been fixed the channel will remain ON.
- If the error is still present the channel will turn OFF again immediately.

While the channel is ON and in switching error mode, RedVision will re-attempt to turn the load on every 60 seconds. During this time the user may turn the channel OFF permanently. (Note that the ability to turn the channel OFF only applies to user-controlled channels - some channels may be automatically switched depending on the configuration of the system.)

ADDITIONAL INFORMATION

CHECKING THE PRODUCT SERIAL NUMBER

The serial numbers for each REDARC device connected to the system can be displayed on the R-Bus diagnostics screen — see 'System Settings' (page 39).

The Product Serial Number is located on the Distribution Box and on the Display.

The Serial Number Labels include the Part Number (circled in BLUE) and the Serial Number (circled in RED). The first 4 digits of the serial number indicate the YEAR and MONTH of manufacture, in the format YYMM.



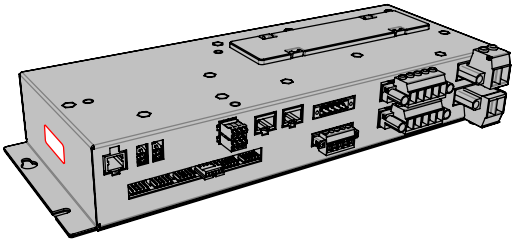

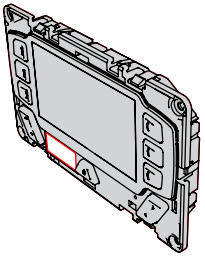

COMPLIANCE INFORMATION

Compliance and Standards listed are for TVMS1280 models.

For Regulatory and compliance information for other products described in this manual, refer to the Instruction Manual supplied with that product.

To view regulatory and compliance information on the RedVision® Display, press the Power button (⏻) once, then press the Compliance Soft Key (❱).

USA FCC COMPLIANCE NOTICE (CFR §15.105):

This equipment has been tested and found to comply with the limits for a Class B digital device, pursuant to part 15 of the FCC Rules. These limits are designed to provide reasonable protection against harmful interference in a residential installation. This equipment generates, uses and can radiate radio frequency energy and, if not installed and used in accordance with the instructions, may cause harmful interference to radio communications. However, there is no guarantee that interference will not occur in a particular installation. If this equipment does cause harmful interference to radio or television reception, which can be determined by turning the equipment off and on, the user is encouraged to try to correct the interference by one or more of the following measures:

- Reorient or relocate the receiving antenna.
- Increase the separation between the equipment and receiver.
- Connect the equipment into an outlet on a circuit different from that to which the receiver is connected.
- Consult the dealer or an experienced radio/TV technician for help

Any changes or modifications not expressly approved by REDARC could void the user's authority to operate the equipment.

This device complies with Part 15 of the FCC Rules. Operation is subject to the following two conditions:

1. This device may not cause harmful interference, and
2. This device must accept any interference received, including interference that may cause undesired operation.

INDUSTRY CANADA (IC) COMPLIANCE NOTICE (RSS-GEN §8.4):

This device contains licence-exempt transmitter(s)/receiver(s) that comply with Innovation, Science and Economic Development Canada's licence-exempt RSS(s). Operation is subject to the following two conditions:

1. This device may not cause interference.
2. This device must accept any interference, including interference that may cause undesired operation of the device

IC Radiation Exposure Statement:

This equipment complies with IC RSS-102 radiation exposure limits set forth for an uncontrolled environment. This equipment should be installed and operated with a minimum distance of 20 cm between the radiator and your body.

LIMITED WARRANTY

For full warranty terms and conditions, visit the Warranty page of the REDARC website. Refer to the web address and contact details applicable to your region.

Australia, New Zealand & Europe

www.redarc.com.au/warranty

REDARC Electronics Pty Ltd
23 Brodie Road (North),
Lonsdale SA 5160
Australia

Australia	+61 8 8322 4848
New Zealand	+64 9 222 1024
UK & Europe	+44 (0)20 3930 8109

North America

www.redarcelectronics.com/warranty

REDARC Corporation
c/o Shallco, Inc.
308 Component Dr.
Smithfield, NC 27577
USA

USA	+1 (704) 247 5150
Canada	+1 (604) 260 5512
Mexico	+52 (558) 526 2898

IMPORTER CONTACT INFORMATION

UK

Ozparts UK Ltd
St Helen's House
King Street
DE1 3EE Derby
UK

Poland

Ozparts sp. z o. o. sp. kom.
Slowackiego 32/5
87-100 Torun, Poland

DISPLAY MOUNTING TEMPLATE

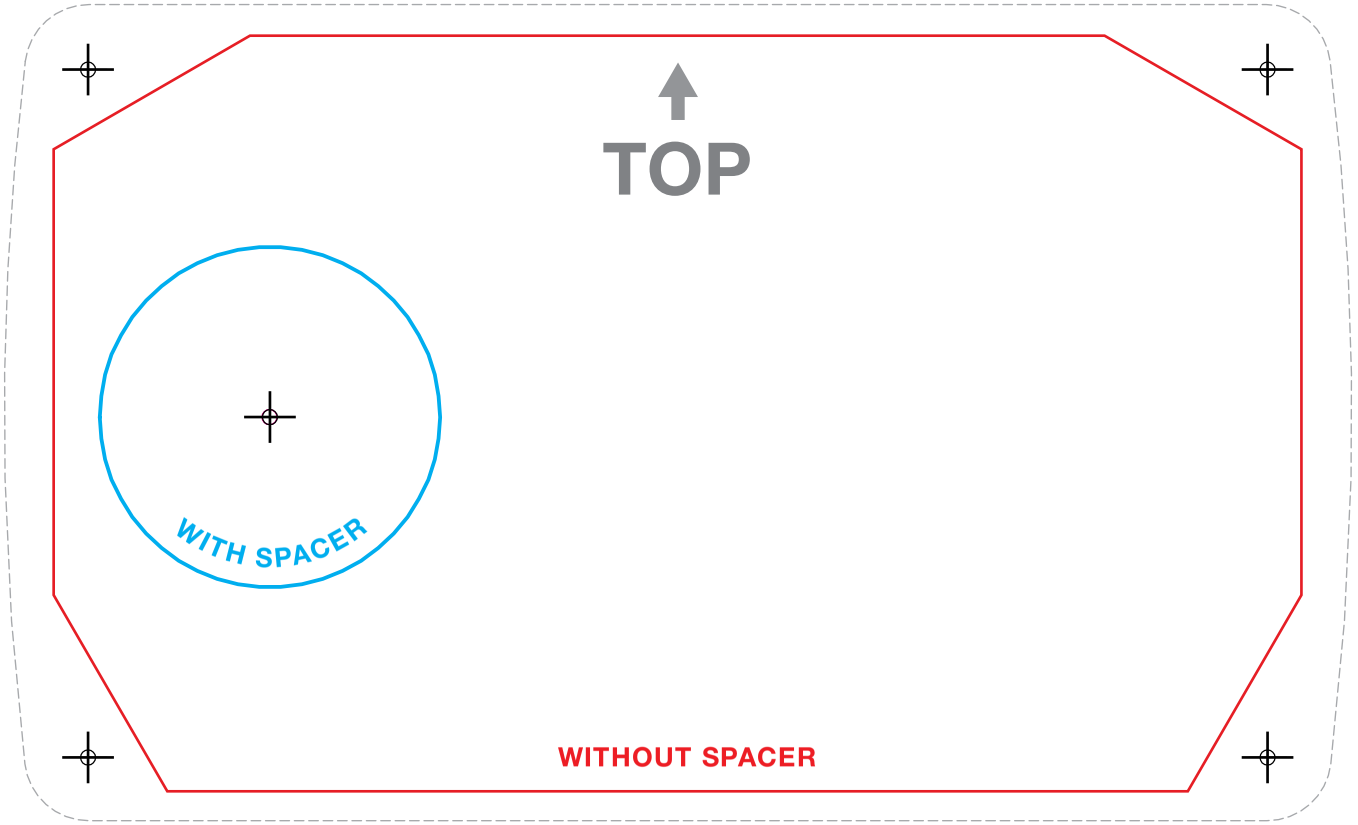

NOTES

REDARC Electronics Pty Ltd
ABN 77 136 785 092

REDARC Electronics Pty Ltd
23 Brodie Road (North),
Lonsdale SA 5160
Australia

Design, product configuration and technical specifications are subject to change without notice. | Copyright © 2022 REDARC Electronics Pty Ltd. All rights reserved. REDARC® and THE POWER OF REDARC® are trademarks of REDARC Electronics Pty Ltd.

CONTACT

Tech Support	1300 REDARC
Head Office	+61 8 8322 4848
New Zealand	+64 9 222 1024
UK & Europe	+44 (0)20 3930 8109
USA	+1 (704) 247 5150
Canada	+1 (604) 260 5512
Mexico	+52 (558) 526-2898

redarcelectronics.com

THE POWER OF REDARC®

WARTVMS1280-11