THE POWER OF REDARC®

REDARC Solar®

Solar Panel Mounting Bracket

MODEL:

- **SPMB0004**

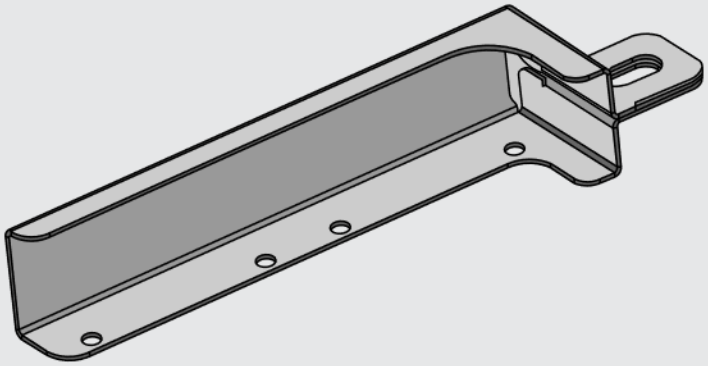

AUSTRALIAN MADE®

Solar Panel Mount Bracket

The **SPMB0004** Solar Brackets is designed and compatible to mount solar panels to Unistrut Series Channel systems and EzyStrut Plain Channel systems.

The suitability of this product depends on the vehicle and solar panel used with the mounting bracket. The solar panel can have a maximum thickness of 35 mm (1.3"). The space between the solar panel and crossbar slots must be equal on both sides and between 17 mm (0.6") to 86 mm (3.4"). At least three mounting holes should be used on each side of the panel. Please refer to the INSTALLATION section on page 5 for more information.

In the instance that your solar panel/roof rack combination does not allow the SPMB0004 to be used, we recommend using the SPMB0002 or SPMB0003 Mounting Brackets as they provide for a more generic installation.

SPMB0001 — suited to mount solar panels with both Rhino–Rack vortex crossbars and the Rhino–Rack heavy duty crossbars.

SPMB0002 — compatible with REDARCs fixed solar panels and other popular solar panels to an ARB Base Rack and Rhino–Rack Steel Mesh Platform systems.

SPMB0003 — compatible with REDARCs fixed solar panels to Rhino–Rack Pioneer Platform crossbar.

WARNINGS AND SAFETY INFORMATION

Save these instructions — this manual contains important safety instructions.

Do not install the mounting brackets unless you have read and understood this manual.

Disclaimer: REDARC accepts no liability for any injury, loss or property damage which may occur from the improper or unsafe installation or use of its products.

SAFETY MESSAGE CONVENTIONS

Safety messages in this manual include a signal word to indicate the level of the hazard as follows:

⚠ CAUTION — Indicates a potentially hazardous situation which, if not avoided, **may result in moderate or minor injury to the operator or to bystanders.** Read the message and follow instructions precisely.

⚠ CAUTION

- Incorrect mounting can cause the panels to become detached during travel, which causes a safety risk to road users. Ensure that you follow the manual's instructions for correct installation.
- Incorrect installation and mounting of the solar panel can effect the performance of the solar panel.
- Leave adequate clearance around the solar panels to ensure the panels do not become partially shaded when in-use, and to allow access for maintenance of the panels and connections.
- Two people are recommended to safely lift the solar panels assembly above shoulder height (e.g. when lifting onto the roof of a vehicle during installation).
- The Solar Bracket must have a minimum of three bolts attached to the solar panel. Any less will result in unsecure and unsafe mounting and may damage your solar panel during travel.
- All bolts must have at minimum two threads past the end of the nut.
- Always use appropriate personal protective equipment (PPE) when operating power tools.



Required tools for installation:

- Philips Head Screwdriver
- 5 mm Allen Key
- Power Drill
- 6.5 mm Drill Bit
- 10 mm Spanner
- Wire brush/file

SOLAR BRACKET PARTS

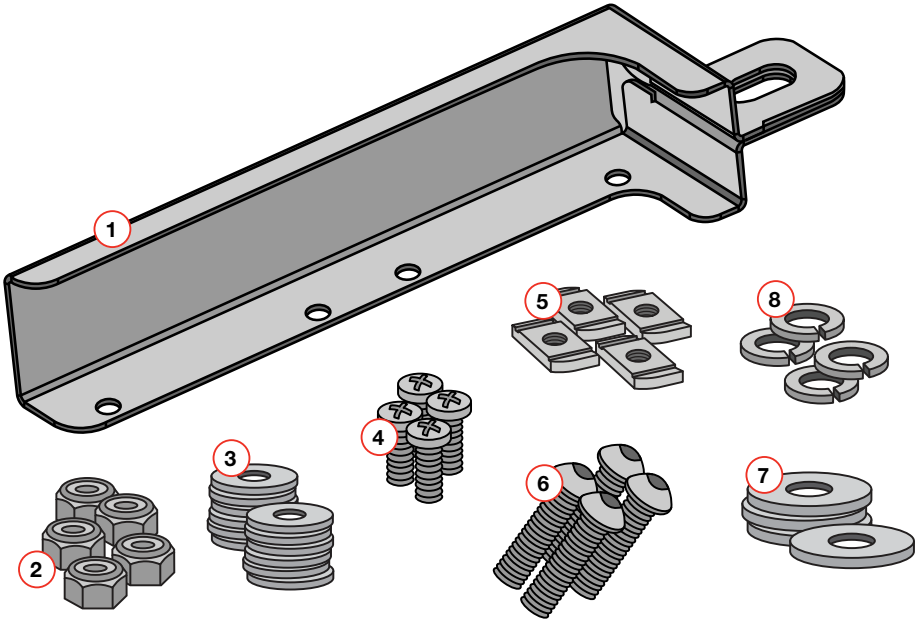

1. Solar Panel Bracket
Supplied with 4 brackets.

2. M6 S/S Nyloc Nut
Supplied with 16 nuts.

3. M6 × 12 mm S/S Flat Washer
Supplied with 16 washers.

4. M6 × 12 mm S/S Philips Bolt
Supplied with 16 bolts.

5. M8 Channel Nut
Supplied with 4 nuts.

6. M8 × 20 mm S/S Allen Key Bolt
Supplied with 4 bolts.

7. M8 × 19 mm S/S Flat Washer
Supplied with 4 washers.

8. M8 S/S Spring Washer
Supplied with 4 spring washers.

DIMENSIONS

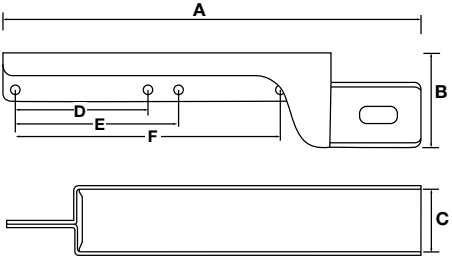

A.	242.5 mm (12.5")
B.	56.5 mm (1.6")
C.	36 mm (1.4")
D.	70 mm (2.7")
E.	100 mm (3.9")
F.	170 mm (6.7")

INSTALLATION

DETERMINE THE MOUNTING POSITION

The Solar Brackets must be bolted and fitted to the solar panel then mounted to the crossbars. Do not install the Solar Brackets to the crossbars first.

To determine where to bolt each mounting bracket to the solar panel, measure the distance between the channel of the two crossbars on the vehicle. Use this distance to mark where the brackets need to bolt to the solar panel in order to fit in-between the two central points of the crossbars.

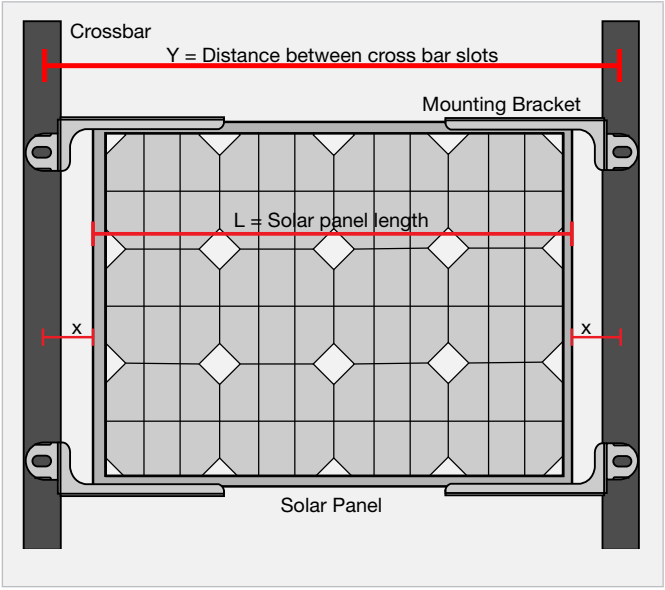

Minimum space between crossbar slots for bracket to be compatible.

Ymin = 34 mm + L
(1.3" + L)

Maximum space between crossbar slots for bracket to be compatible

Ymax = 172 mm + L
(6.7" + L)

X is the distance between the crossbar slot and the solar panel on either side of the solar panel. X should be equal on each side and be between 17 mm (0.6") to 86 mm (3.4").

DRILL HOLES

Remove the brackets and drill the marked holes on the solar panel, preferably using a 6.5 mm drill bit and stopper depth of 6.5 mm.

⚠ CAUTION

The Solar Bracket must have a minimum of three bolts attached to the solar panel. Any less will result in unsecure and unsafe mounting, which may damage your solar panel during travel.

Holes should be deburred after drilling with a wire brush or file.

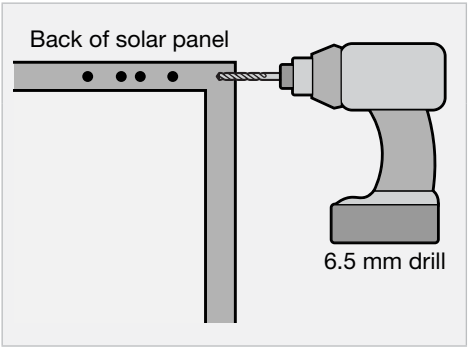

ASSEMBLE BRACKETS TO PANEL

Slide the Solar Bracket over the solar panel edge and align it with the drilled holes Use the Nyloc Nuts, M6 Flat Washers and M6 Bolts supplied to fix the brackets to the solar panel.

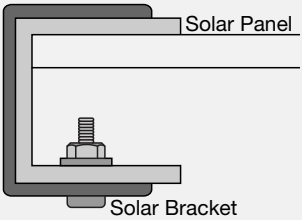

⚠ CAUTION

Leave adequate clearance around the Solar Panels to ensure the panels do not become partially shaded when in-use, and to allow access for maintenance of the panels and connections.

MOUNT TO CROSSBARS

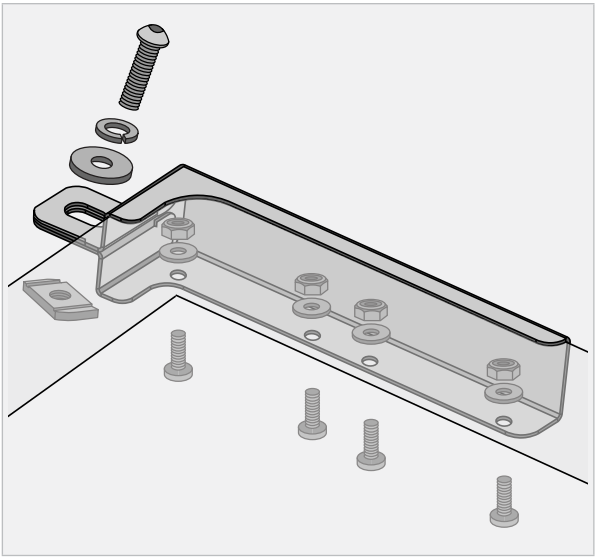

Lift the solar panel with the attached Solar Brackets into position on the crossbars.

Slide the M8 Channel Nut into the crossbar. Next, slide an M8 Bolt through a Spring and Flat washer, then the Solar Bracket and then into the Channel Nut. Apply this fitting to each Solar Bracket to complete the installation.

COMPLETED INSTALLATION

Note: Regularly check the mounting brackets for loose fasteners to avoid damage to the solar panel and the crossbars due to loose connection.

⚠ CAUTION

All bolts must have at minimum two threads past the end of the nut.

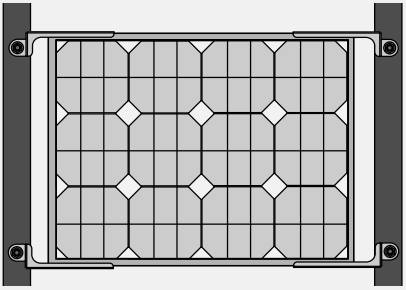

WARRANTY

LIMITED WARRANTY

For full warranty terms and conditions, visit the Warranty page of the REDARC website:
www.redarcelectronics.com/warranty

Australia, New Zealand, UK & Europe

REDARC Electronics Pty Ltd
23 Brodie Road (North),
Lonsdale SA 5160
Australia

Australia	+61 8 8322 4848
New Zealand	+64 9 222 1024
UK & Europe	+44 (0)20 3930 8109

North America

REDARC Corporation
c/o Shallco, Inc.
308 Component Dr.
Smithfield, NC 27577
USA

USA	+1 (704) 247-5150
Canada	+1 (604) 260-5512
Mexico	+52 (558) 526-2898

Design and specifications are subject to change without notice. | Copyright © 2024 REDARC Electronics Pty Ltd. All rights reserved. REDARC® and THE POWER OF REDARC® are trademarks of REDARC Electronics Pty Ltd. REDARC®, THE POWER OF REDARC®, and REDARC Solar® are trademarks of REDARC Electronics Pty Ltd.

Tech Support
1300 REDARC (1300-733-272)

Australia
+61 8 8322 4848

New Zealand
+64 9 222 1024

UK & Europe
+44 (0)20 3930 8109

USA
+1 (704) 247-5150

Canada
+1 (604) 260-5512

Mexico
+52 (558) 526-2898

redarcelectronics.com

THE POWER OF
REDARC®
SOLAR

INST139-4