DECKED

INSTALLATION INSTRUCTIONS*

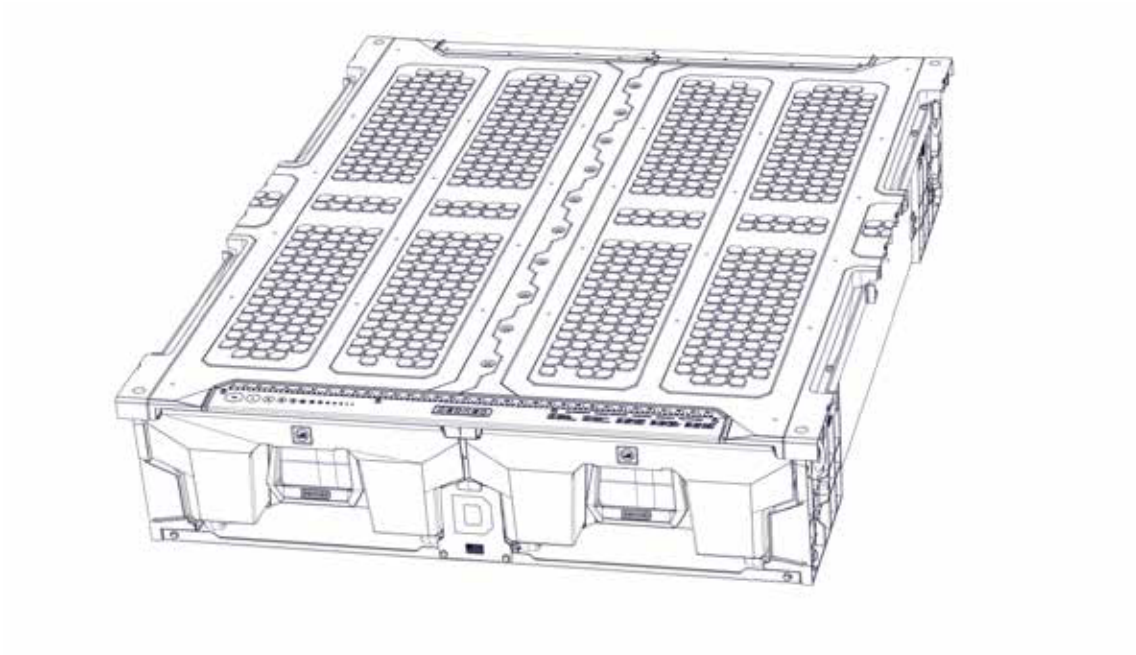

VM1/VM2 SPRINTER VANS

2007-CURRENT

144" AND 170" WHEEL BASES

*Trust us on this one; don't go commando and attempt your install without reading. You'll just cuss a bunch and create even more chaos in your truck bed.

TOOLS REQUIRED

- 7/16” wrench
- 3/8”, 7/16” and 1/2” sockets
- 3/16” and 7/32” hex keys
  (we included these for you, but you may prefer your own)
- Trusted friend with a weak mind and a strong back.

INSTALL VIDEO

High tech link to video here or you can visit decked.com/installvideo

SCAN FOR
INSTRUCTION VIDEOS

WARNING!

This product **MUST BE INSTALLED** in conjunction with a **bulkhead wall**, and/or **adequate structural framework** to prevent injury as a result of a traffic accident.

MADE IN THE USA

HEY! TORQUE BOY
READ BEFORE YOU INSTALL

Welcome to DECKED! In a world of crappy instructions, bad advice, and questionable sources of truth, we are here to make sure that your install goes as smoothly as possible, saving you headaches and heartburn. That said, your part is to read the darned instructions!

1. Only use cordless screw guns or drivers with a clutch and speed setting adjustment.

2. Set your clutch down in the bottom 1/3 of the available torque settings.

3. Set your drill speed to the slowest speed.

4. We tell you all of this to prevent you from blowing up the inserts and setting your install back. Start screws into inserts with your fingers to make sure you don't cross-thread.

5. Do NOT use pneumatic air tools or old school tools with no torque settings.

6. The DECKED drawer system is designed for CARGO vans only. Factory tie downs must be present for proper installation.

*NOTE: Two extra threaded inserts are included in the PREP-EXTRA bag. That's all you get big timer, unless you call us and ask for more. The repair inserts will replace any stripped inserts in the corner support feet and the vert. So, hand-tighten until snug only! You can also screw the feet inserts back in if dislocated. Use a flat screwdriver to screw them back in from below.

CONTENTS

DECKED CARTON

CORNER SUPPORT FEET 4
C-CHANNELS 2
SIDE CLOSEOUT PANELS..... 2
LEFT/DRIVER PANEL 1
RIGHT/PASSENGER PANEL..... 1
CABSIDE CLOSEOUT 1
CENTER VERT (AXLE INSTALLED) 1
DRAWERS (ONE HANDLE INSTALLED) 2
TORSION BRACE 1
SIDE CLOSEOUTS..... 2
RULER 1
HARDWARE KIT 1
SIXER CASE 1
HALFRACK CASE..... 1
DRAWER DIVIDERS 2
DRAWERGANIZER 1
SIDE GUARDS 4

HARDWARE BOX

C-CHANNELS
PREP VAN
PREP EXTRA
BOLTS
DRAWER BRACKETS
DRAWER HW
TUBES
HANDLE
HANDLE HARDWARE
XY WHEELS x 2 bags
FS SCREWS
CODPIECE
WEATHERSTRIPS
3/16” HEX KEY
7/32” HEX KEY
TURNBUCKLES
BARREL NUTS/SCREWS - 170” wheel base only: Bag included in outer carton
RETENTION CABLE KIT
SIDE GUARDS

ASSEMBLY OVERVIEW

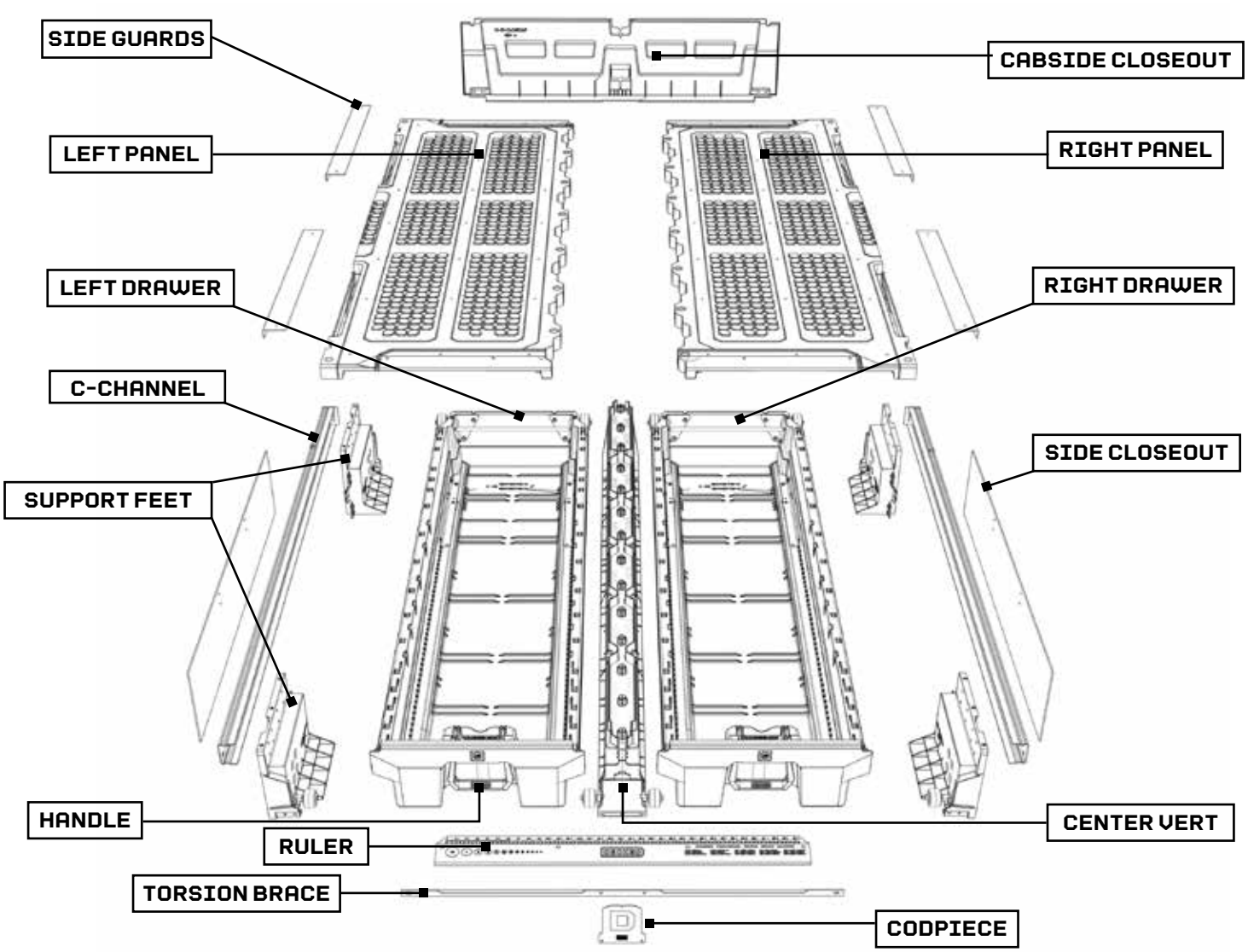

STEP 1:
ARRANGE YOUR ARRANGEMENT

1. Some vans have a built up floor, rendering them flat.
   If your van has a bare metal floor with ribs and valleys, you may need some shims. The shims can be installed later if needed.
   Call us to discuss or email service@DECKED.com.

2. Retention cables must be installed. Mounting holes must be drilled into the cabside closeout panel. Find the two, small dimples on the top of the cabside closeout panel. Use a 5/8" drill bit to drill an access hole at the dimples. The hole needs to be large enough for the 1.5" long, black metal spacer in the cable kit to fit through.
   Test fit the spacer. Enlarge the hole slightly if needed.

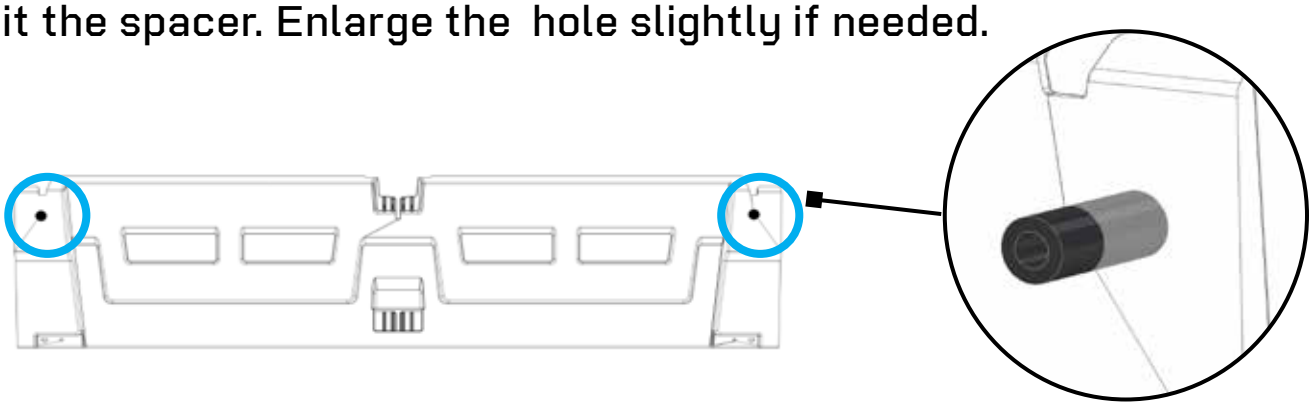

3. Hook center vert tabs into cabside closeout panel slots and push vert down to engage.

4. On flat ground arrange the four support feet and vert assembly as shown. The tabs on the support feet must face each other.

5. All three axles must be located at the tailgate end of your lay out.

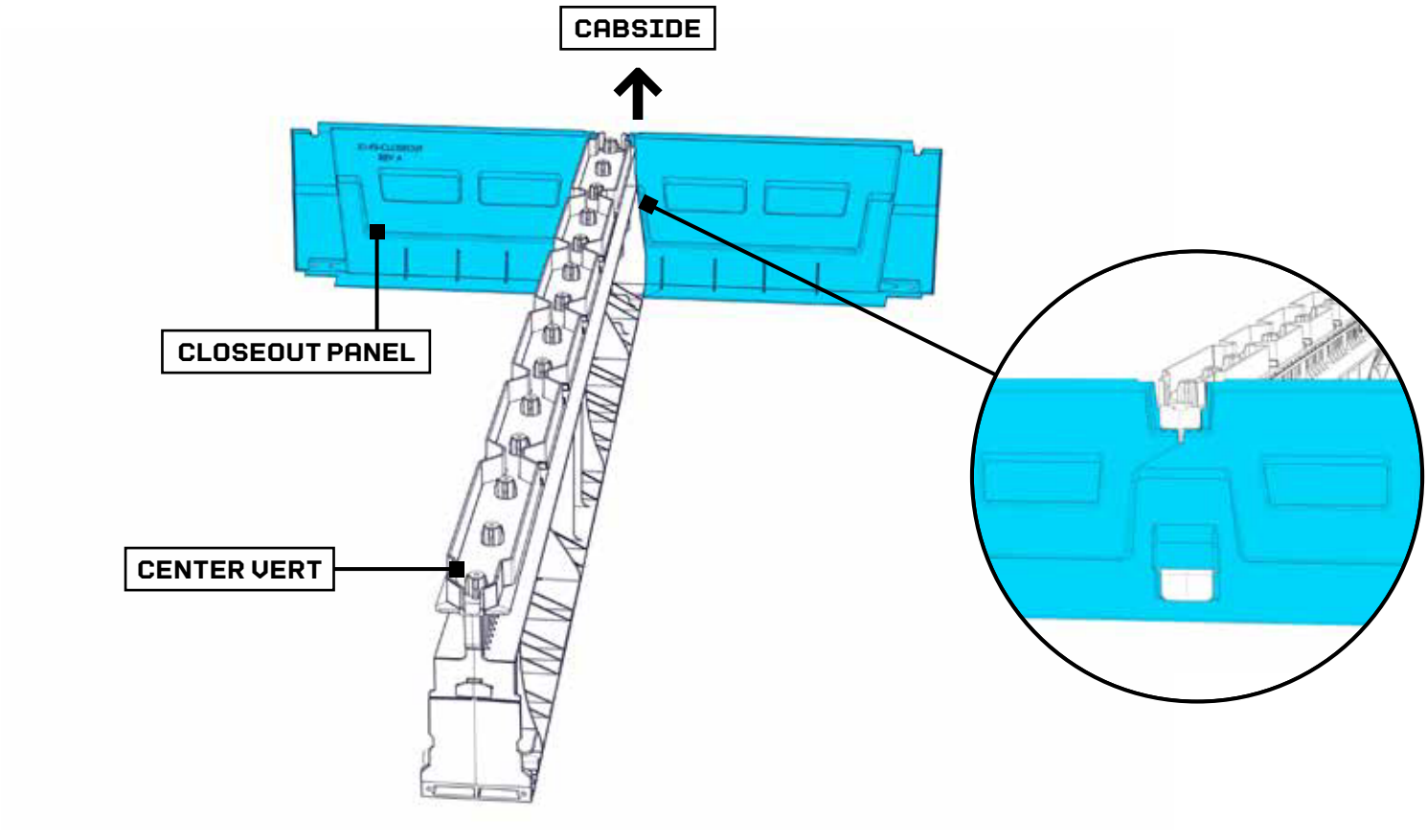
CABSIDE
CLOSEOUT PANEL
CENTER VERT

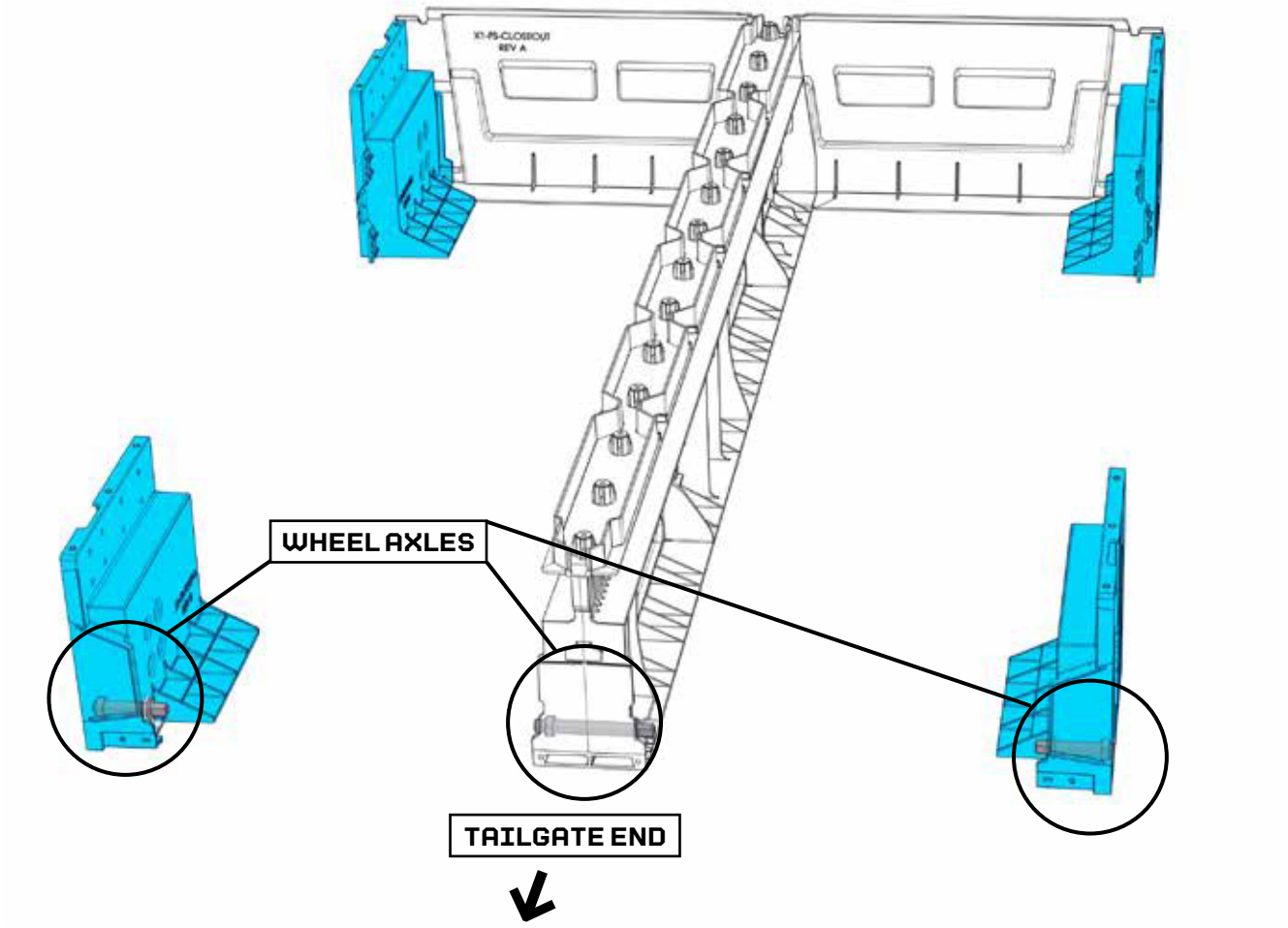
WHEEL AXLES
TAILGATE END

STEP 2:
CHANNEL YOUR ENERGY

1. Place a C-Channel on the ledges of the corner feet on each side as shown. The end plate MUST be on the cabside of the assembly.

2. Slide a side closeout panel down between the tabs on the support feet on both sides. Make sure the mounting holes in the closeout panel align with the mounting holes in the C-Channels.

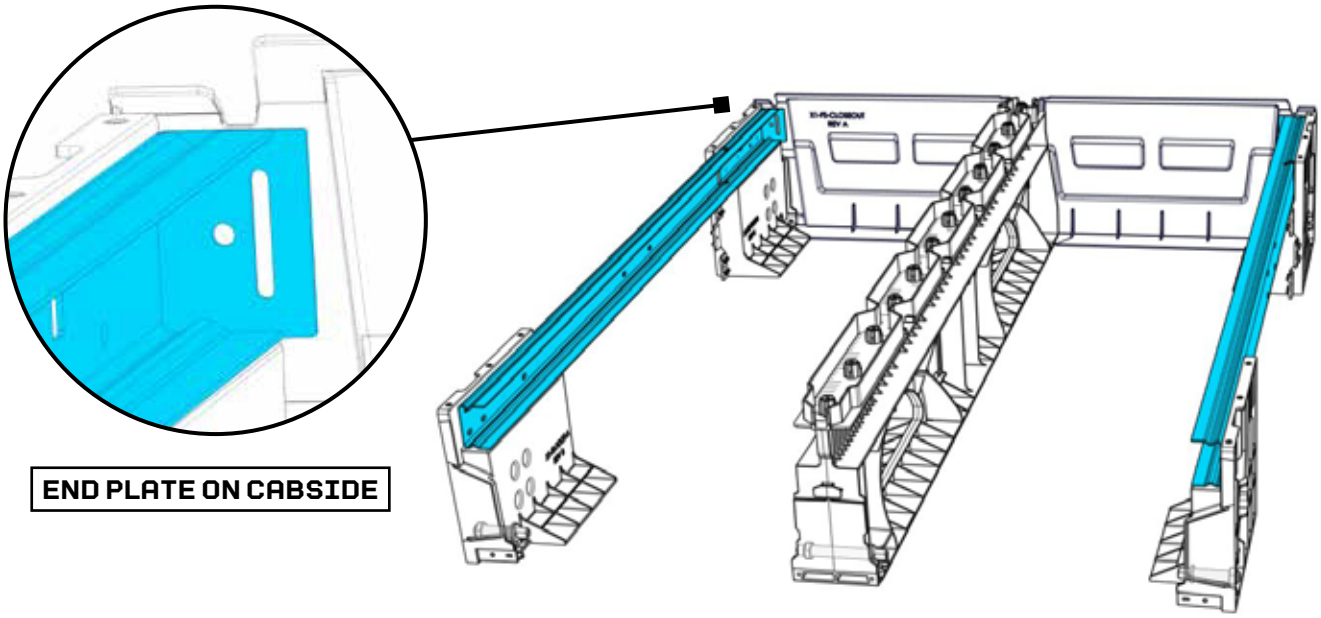

END PLATE ON CABSIDE

TAILGATE END

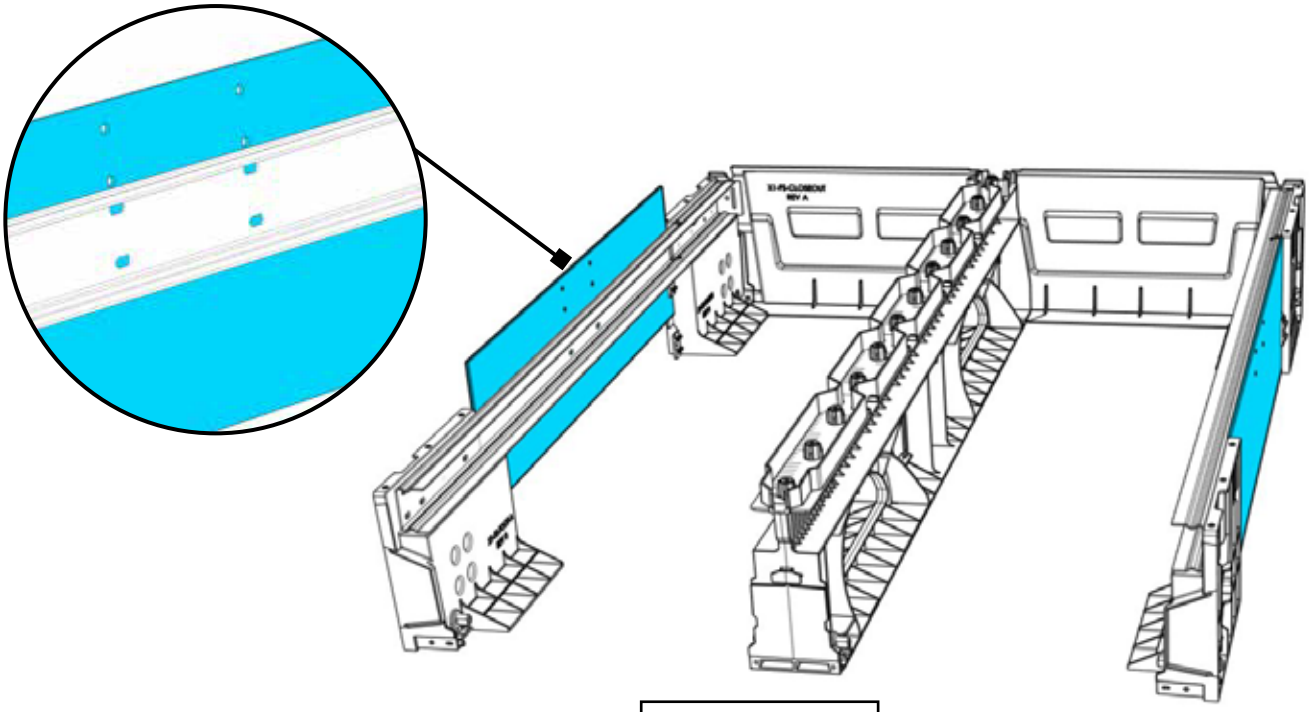

TAILGATE END

STEP 3:
GET BOLTED

1. Secure the left and right side closeout panels to the C-Channels using the 1” bolts and flanged nuts.

   NOTE: The bolt heads must be on the inside of the C-Channel.

2. On the TAILGATE side only, install one DECKED tie down bracket on the outbound corner (the 2nd set of holes in from the end) of each support foot with the 1” bolts and nuts where shown. The hook should face the tailgate on both sides. Remember the bolt heads go on the inside of the C-Channel.

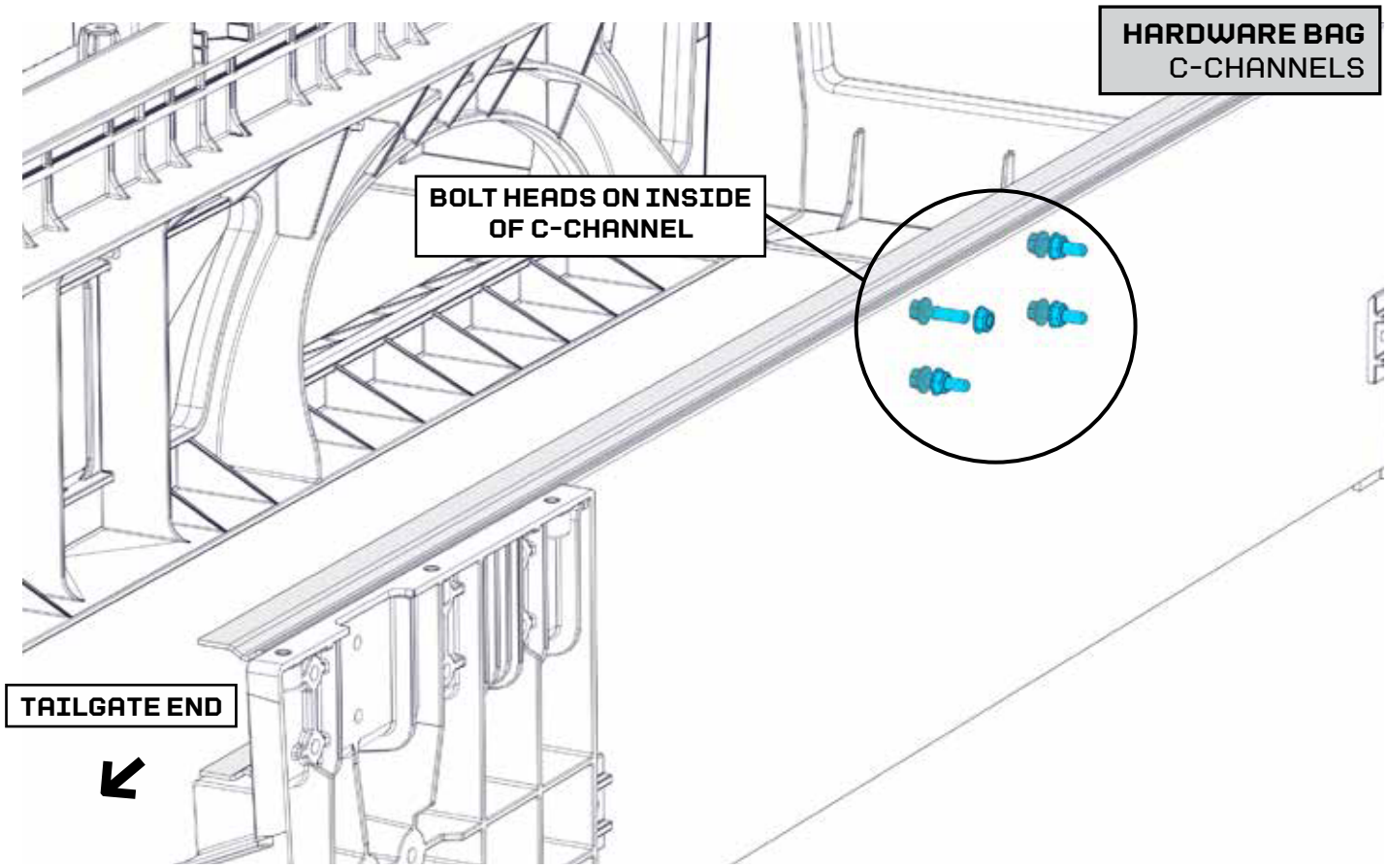

TAILGATE SUPPORT FEET

HARDWARE BAG
PREP VAN, C-CHANNELS

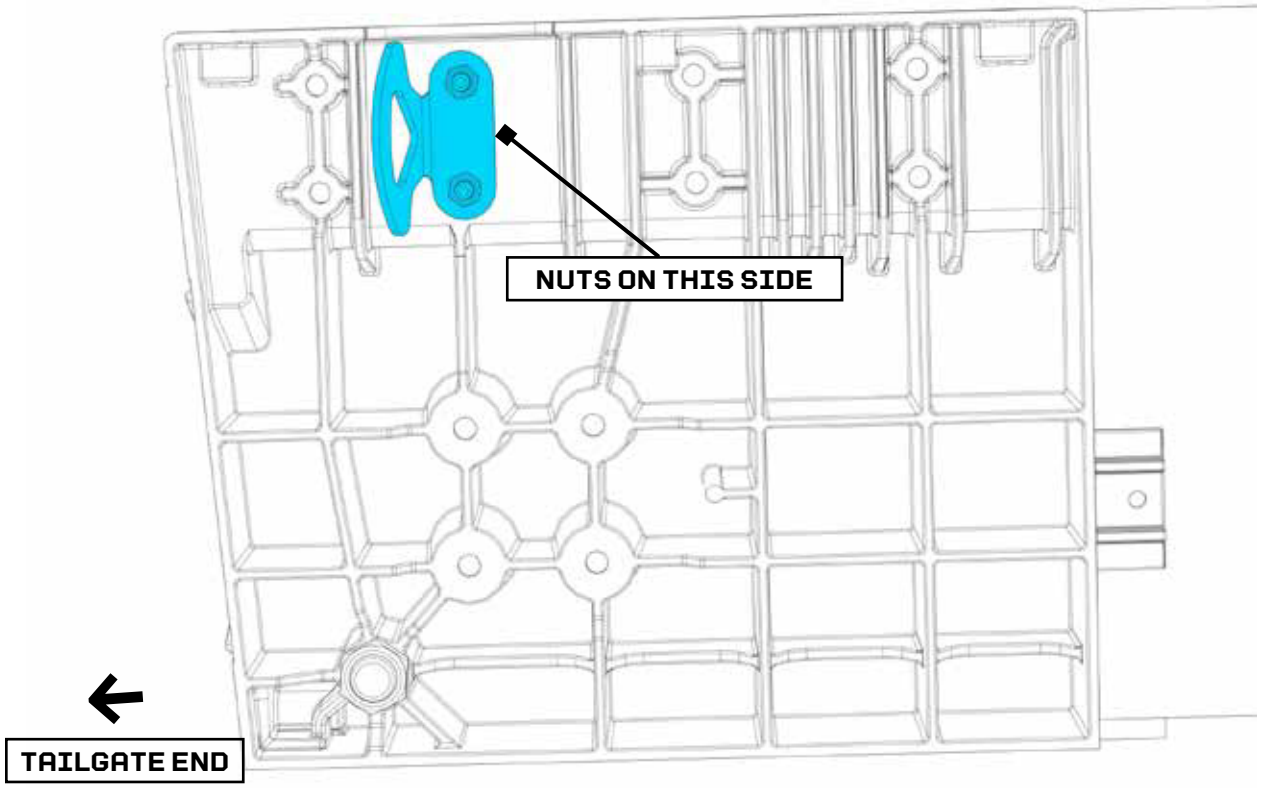

STEP 4:
GET HOOKED

1. Install one DECKED tie down bracket onto the outbound corner of each CABSIDE support foot.
   NOTE: The bolt heads must be on the inside of the C-Channel.

2. There is a horizontal slotted hole in the C-Channel inbound from each corner bracket. Depending on the side, the slotted hole may align to a top or bottom mounting hole in the foot. Install one bolt through the slotted C-Channel hole into the coordinating hole on the corner foot. Secure with flanged nut. Repeat on the other three corner support feet. You should have just used 20 nuts and bolts total.

3. Place the three assemblies into the van. The axles must be on the tailgate/rear side.

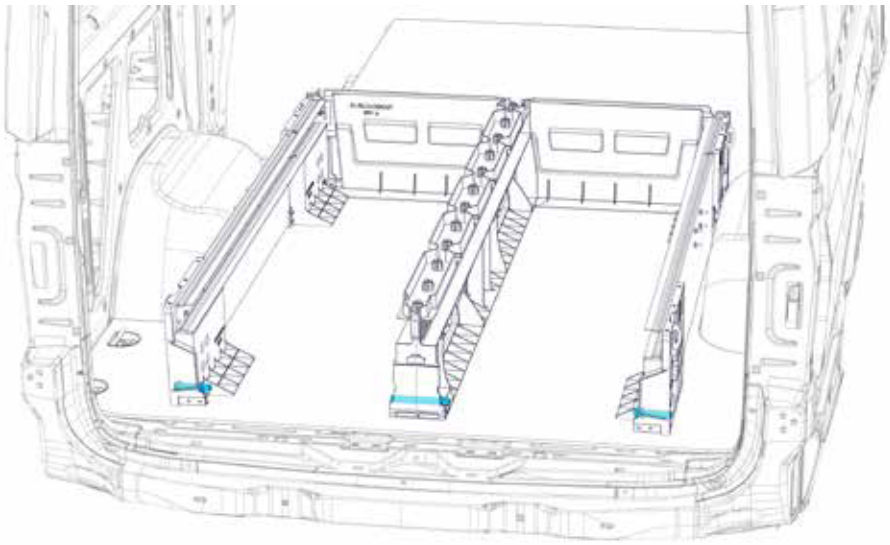

CABSIDE SUPPORT FEET

HARDWARE BAG
PREP VAN, C-CHANNELS

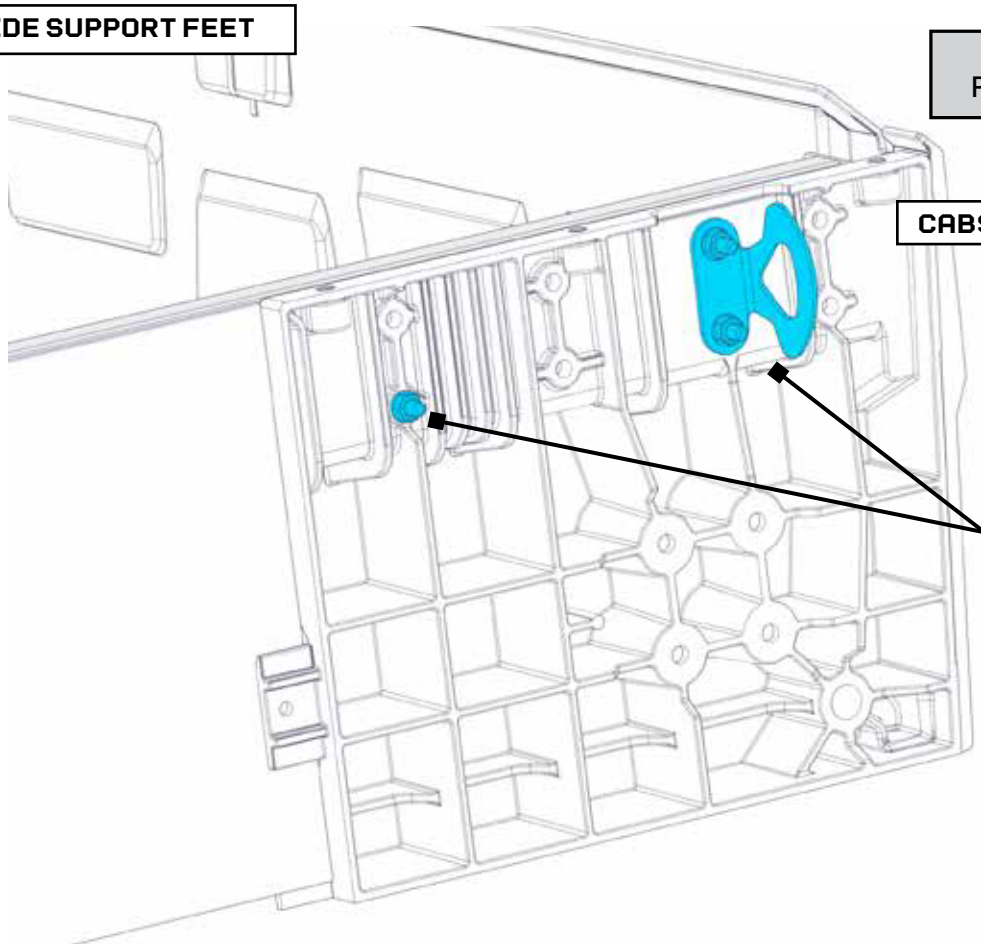

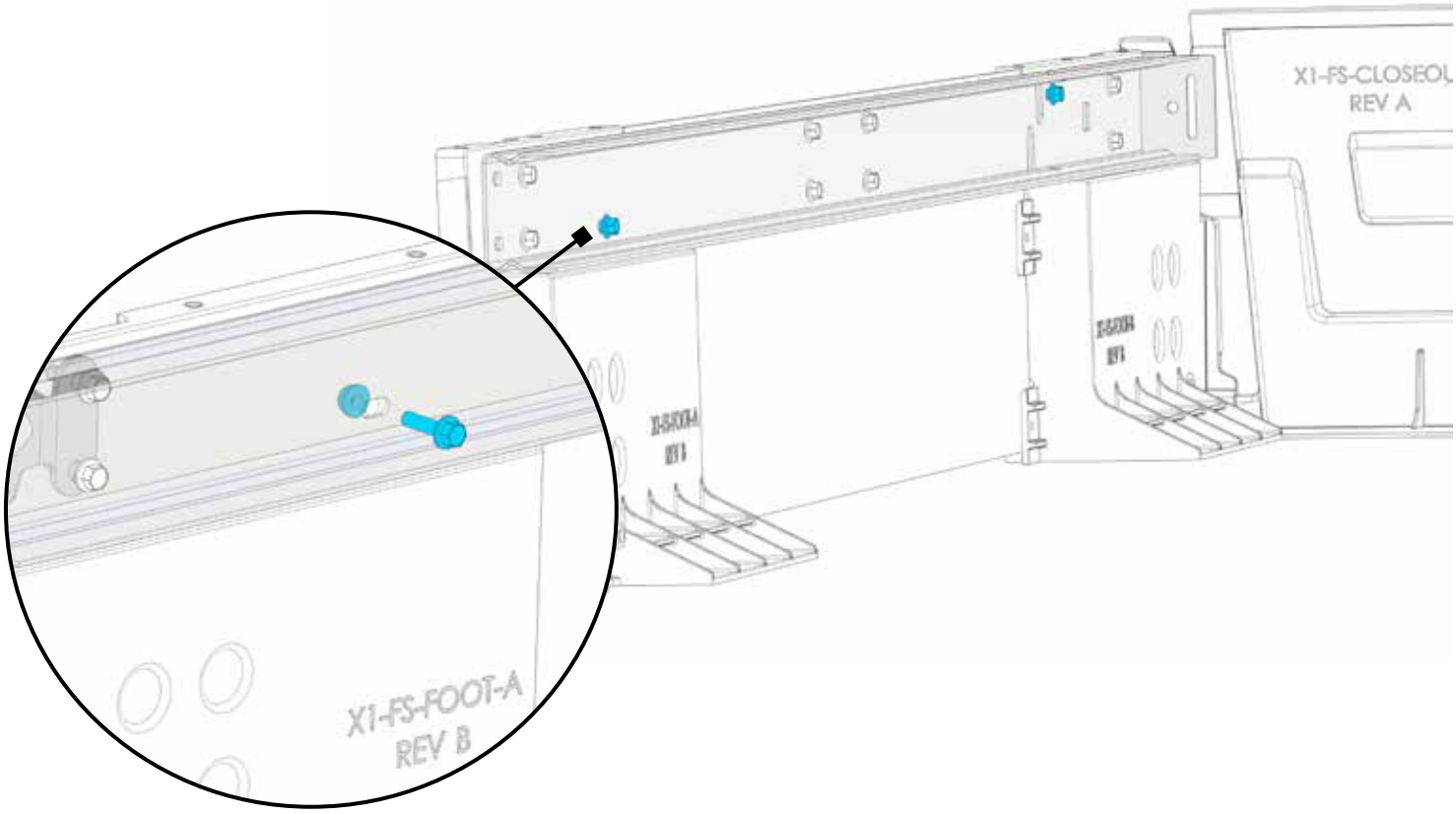

STEP 5:
TIE ONE ON

1. Install the cable assembly on the CABSIDE end on one side only. Sandwich the white spacer between the cabside closeout and the C-Channel. Thread the 2.5" bolt through the large black washer, one end only of each retention cable and the 1.5" black tube spacer. Insert this assembly through the cabside of the closeout panel mounting hole and through the white spacer. Install a flanged nut on the inside of the C-Channel end plate to hold everything together. Leave loose for now.

2. Use the attached cable closest to the system to capture the factory tie down on that side. Loop the loose cable eye through the factory tie down.

3. Pull the cable across the cabside of the assembly towards the other C-Channel attachment point and lay it down.

4. Pull the other attached cable across the system and loop it through the opposite cabside tie down.

5. Repeat the cable eye install process with the loose end of the cables on the other side. Tighten the nuts on the inside of the C-Channels to hold the cables in place. The cables should cross each other near the middle of the cabside panel.

6. Stretch your hamstrings.

HARDWARE BAG
CABLES, VAN CABLE HW

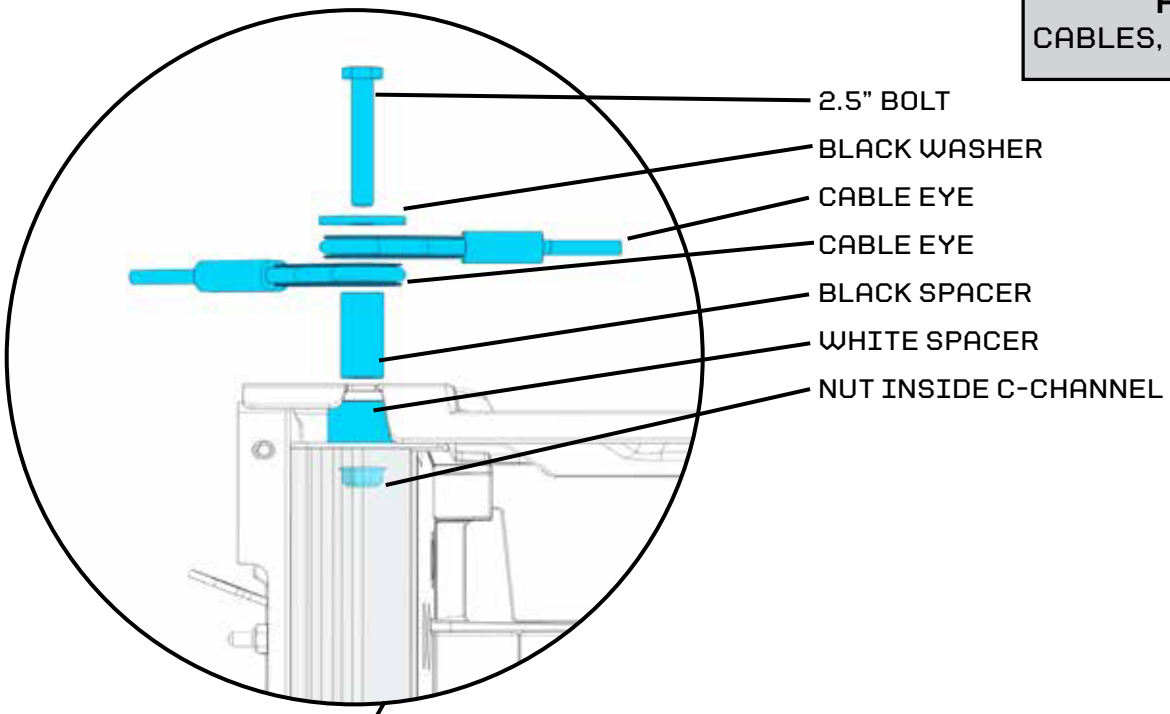

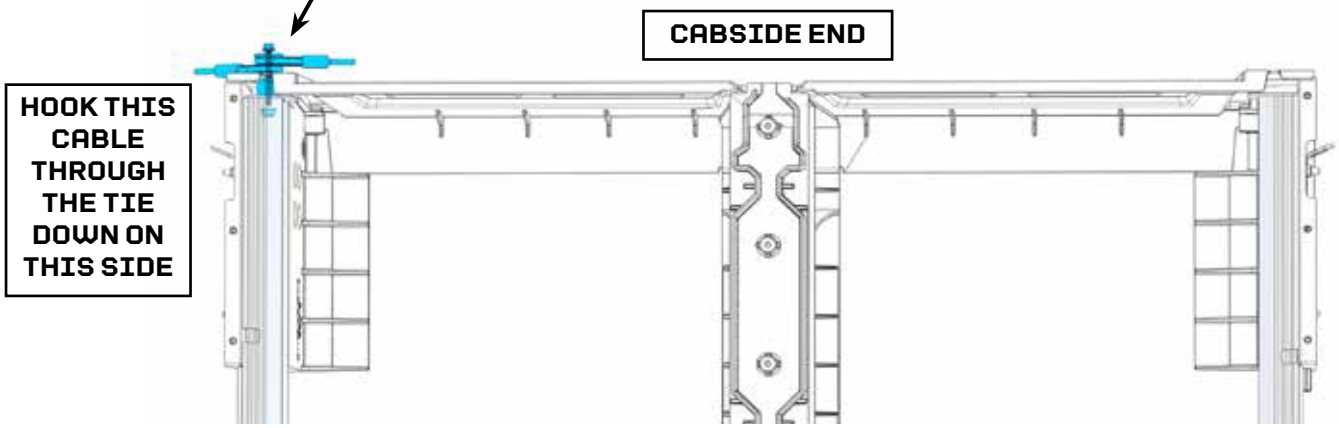

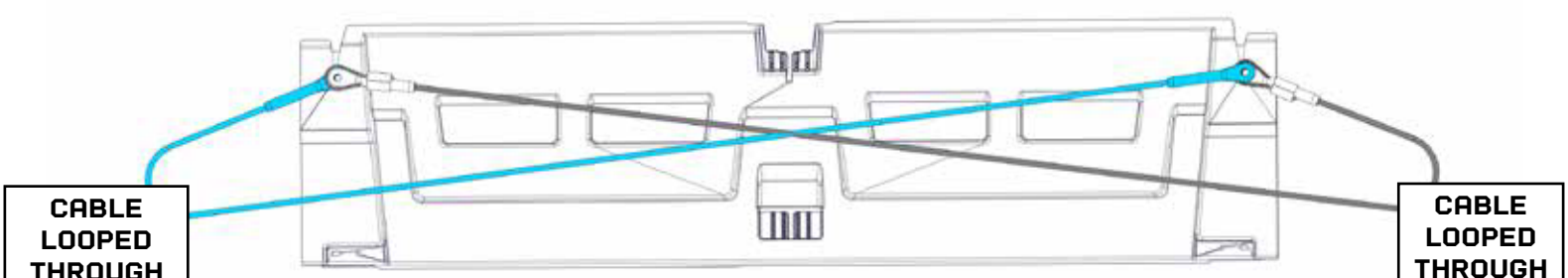

INSTALLED CABLES - CABSIDE SHOWN

STEP 6:
BIG DECK ENERGY

1. Ask a buddy to help place one deck panel onto the assembly.

2. Attach the panel to the cabside support feet with three bolts. Tighten until snug.

3. Attach the panel to the tailgate support feet with three bolts. You can loosen the three C-Channel bolts and nuts at the tailgate side to shift the support foot front to back to align the mounting points if necessary. Retighten the bolts and nuts after the panel is installed.

4. Repeat with the other panel.

5. Install the panels to the center vert. Do not overtighten. You'll have two extra bolts if you have a short wheel base.

HARDWARE BAG
BOLTS

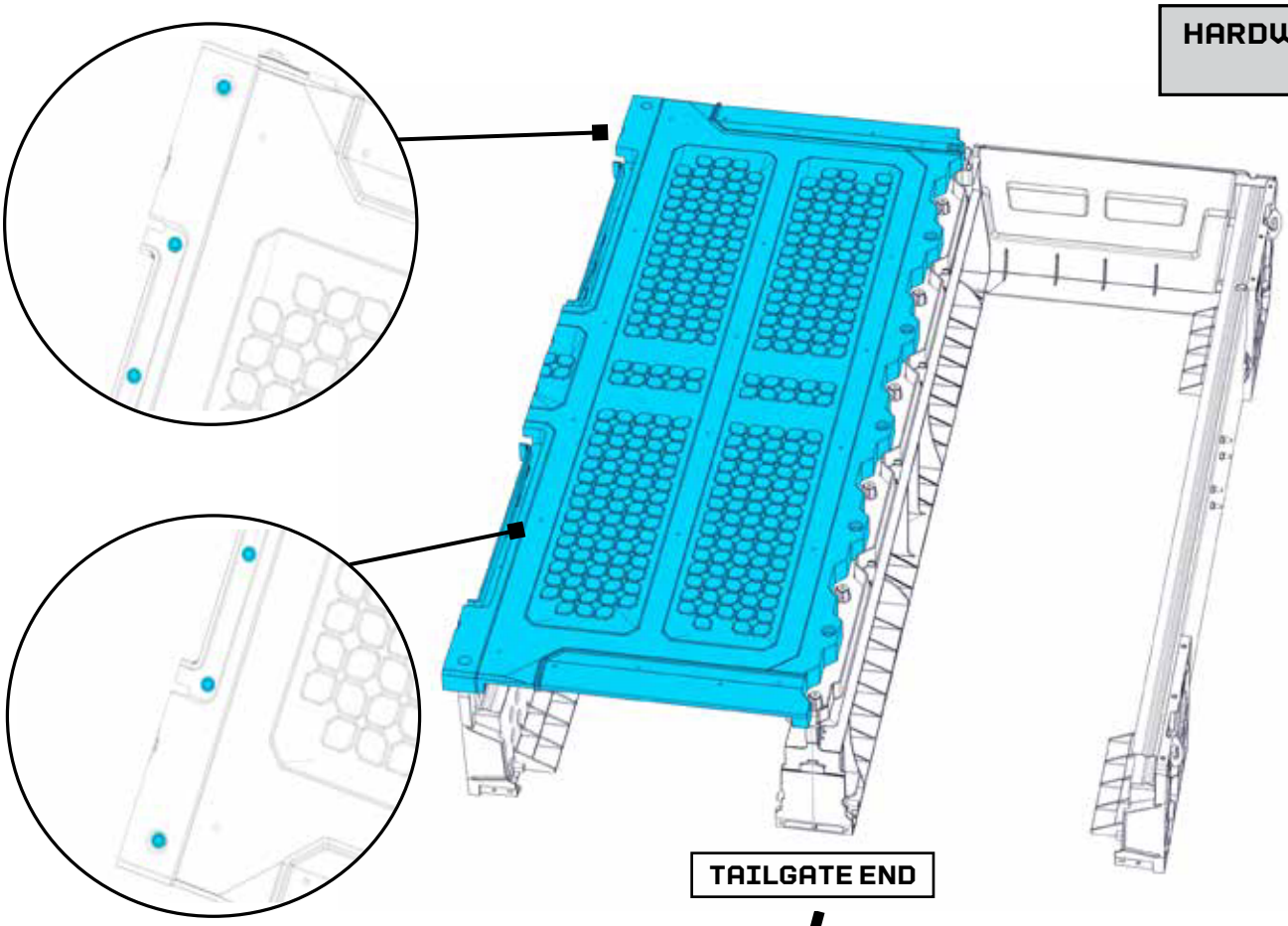

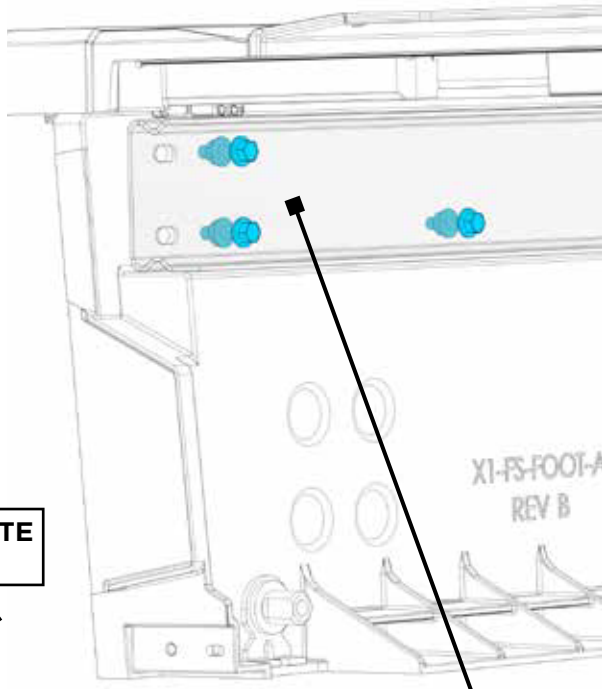

TAILGATE END

LOOSEN TO SHIFT THE TAILGATE FOOT IF NEEDED

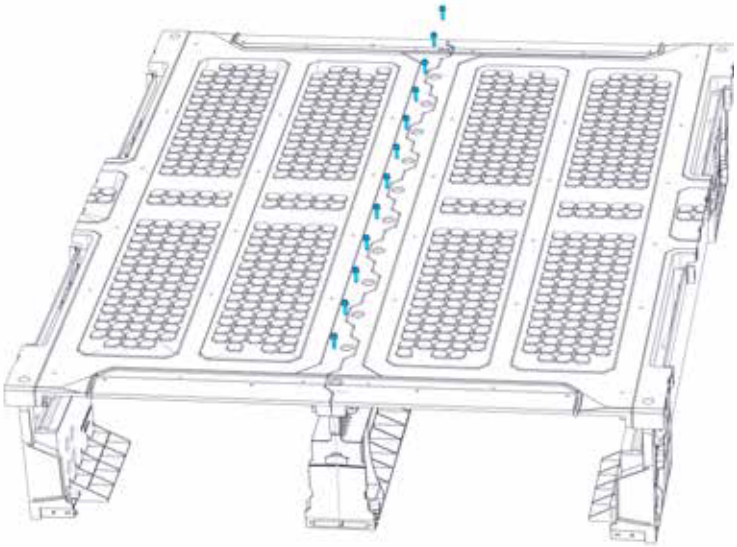

STEP 7:
ADORN YOUR DRAWERS

1. LONG BED TRUCKS ONLY: (6'4" - 8' beds)
   Your drawers will have drawer braces pre-installed.
   Look for the BARREL NUTS/SCREWS bag in the outer carton, not in your hardware kit.

   Install two barrel nuts/screws through each drawer brace where shown.

   There are no drawer brackets in the short drawers (5'5" - 5'9" beds) - skip this step.

2. Each drawer has a left and a right wheel bracket.

3. Place the brackets into the drawers as shown.

4. Install two 3/4" bolts into the bottom two bracket holes. Secure with nuts and tighten until snug.

5. Install the 1.5" (the obviously longer one) bolt into the back mounting hole where shown. Secure with a nut and tighten until snug.

6. Use two 3/4" bolts to install the tube braces.

7. Install the BIG wheels with a 7/32" hex driver.

8. Flex for the neighbors.

HARDWARE BAG
DRAWER BRACKETS, DRAWER HW, XY WHEELS, TUBES, BARREL NUTS/SCREWS (long drawers only)

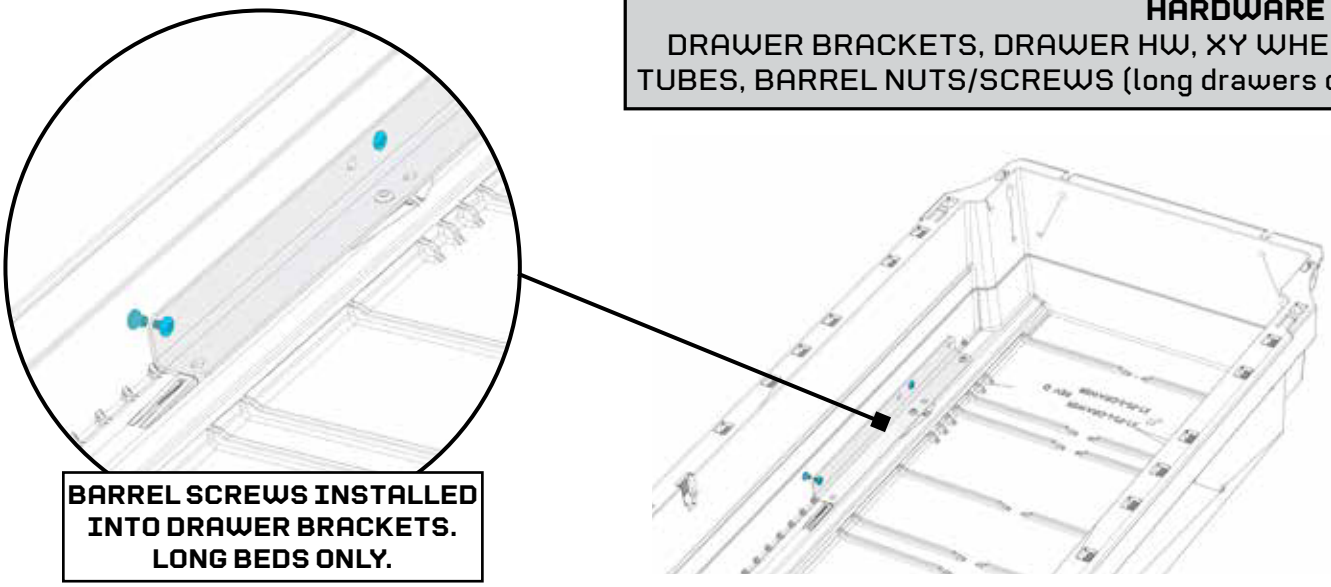

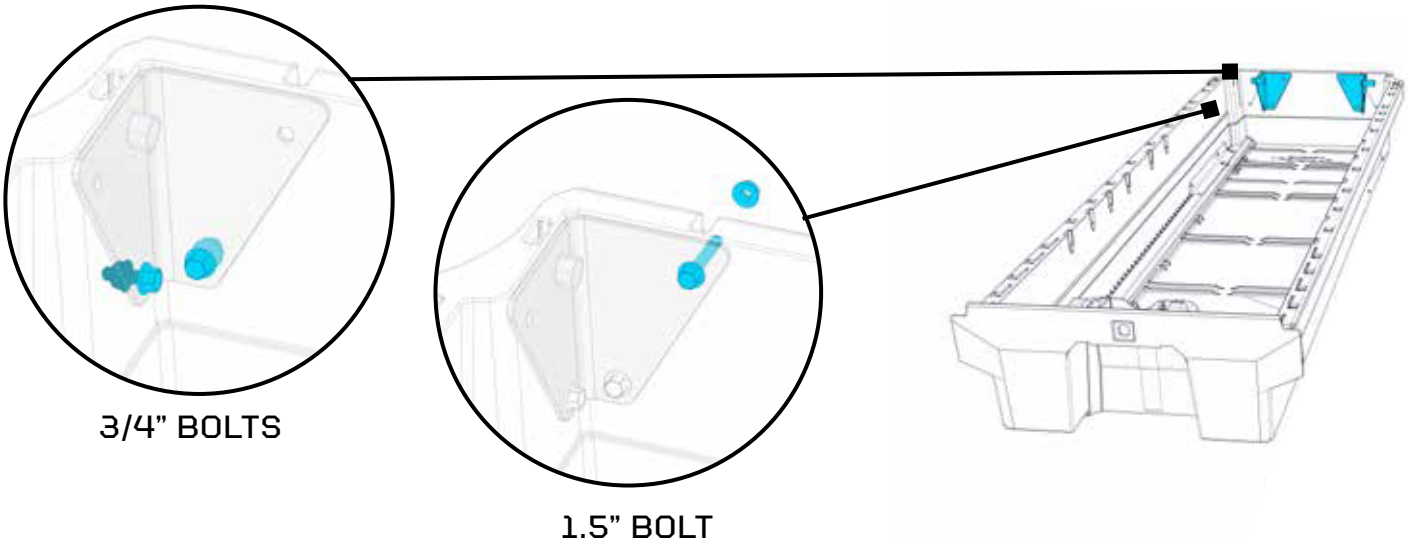

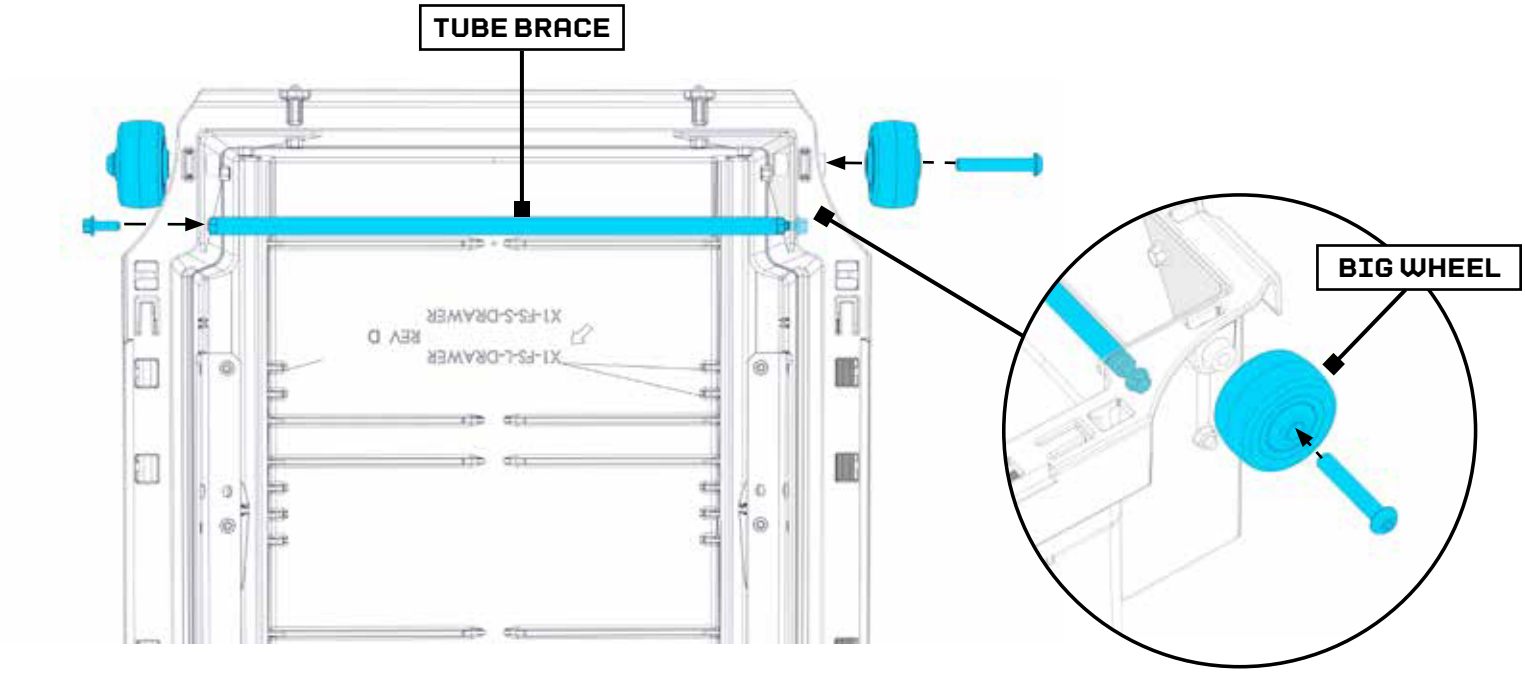

STEP 8:
THE LOVE HANDLE

1. Ok, big timer, one drawer handle assembly needs to be done by you. Why? We had to fit every thing in one box!

2. Save yourself the headache, watch this short installation video: DECKED.com/videohandle.

3. From the front face of the drawer, place the springs up and into the cavities on either side of the handle slots, red spring=right spring.

4. Install a clevis pin through each outside drawer hole and through the spring to hold the spring in place. Do not push through 2nd hole yet. If it's sticky you may need to lightly tap the clevis pin to get it threaded.

5. With the DECKED logo facing outward, insert the handle ends behind the spring arms. Hook the spring arms into the handle notches and rotate the arms of the handle toward the clevis pins, which will pull the spring arm downward and load the spring with pressure.

6. When the handle hole is aligned to the clevis pin, push the pin through the handle hole and through the inside drawer hole. Repeat on the other side of the handle. If it's sticky you may need to lightly tap with a hammer to get it all the way through.

7. Install a hair pin through each clevis pin. Check function, make sure your handle is snappy.

HARDWARE BAG
HANDLE, HANDLE HW

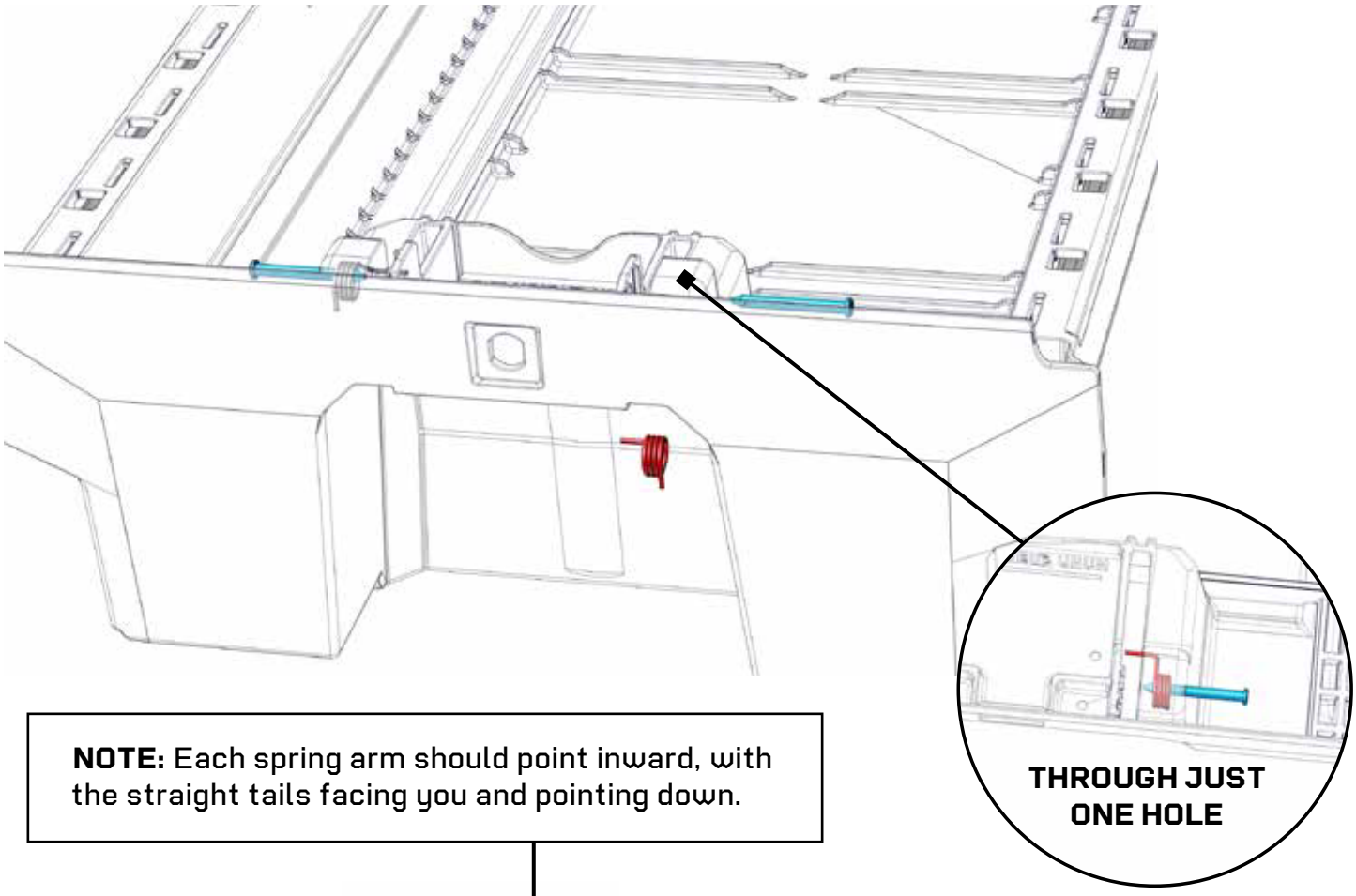

NOTE: Each spring arm should point inward, with the straight tails facing you and pointing down.

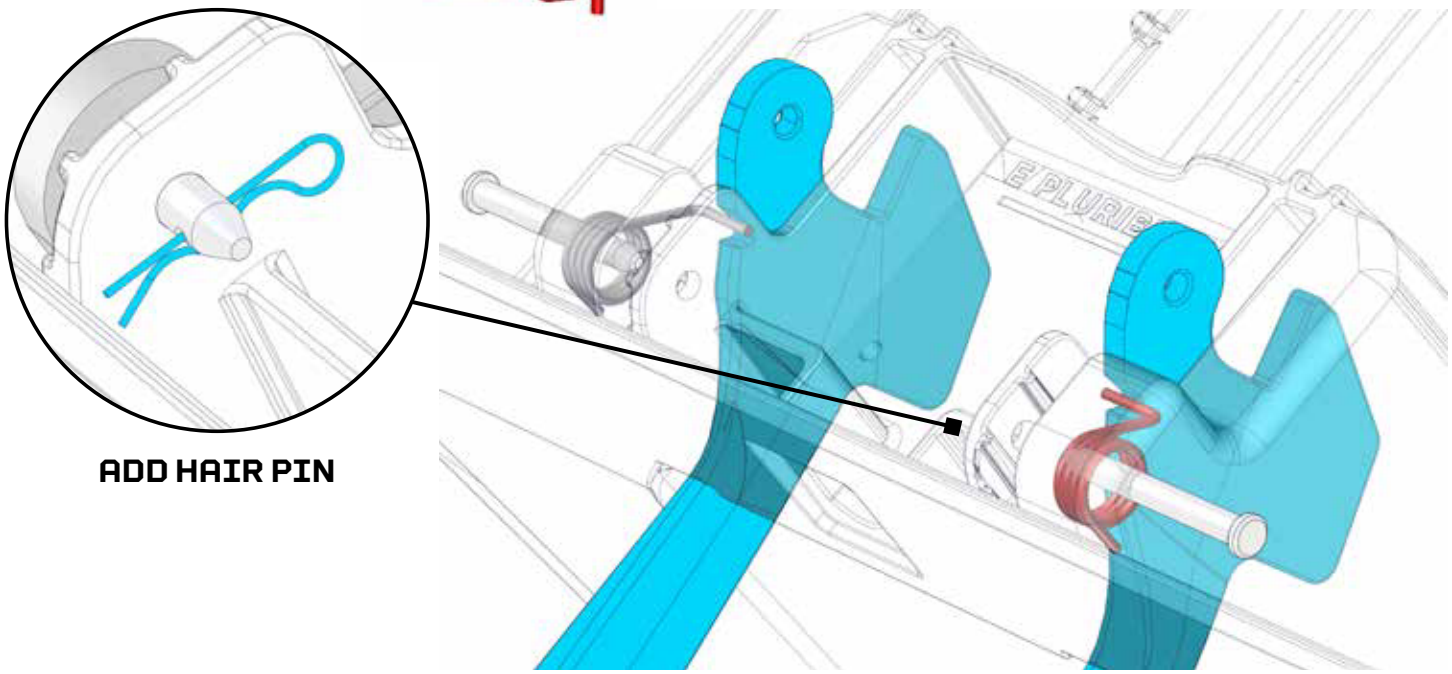

STEP 9:
DRAWERS MADE TO ORDER

1. Install one drawer at a time.

2. Holding the drawer level with the panel, carefully support the drawer while rolling the wheels into the channels. Seat the drawer into place.

   NOTE: Do not attempt to open/close the drawers until all tailgate wheels are installed.

3. Use a stash bin lid or a friend to prop the drawer up. Install the four LITTLE wheels under the drawers using the 7/32" hex key.

4. Repeat with the other drawer.

5. Perform two karate high kicks.

TECHNIQUE TRICK: Get the drawer pressed all the way up against the deck panel and make sure you have not placed the weatherstrips on the drawer lip yet. If you have man hands, press the wheel against the axle to start the threads using the driver.

HARDWARE BAG
XY WHEELS

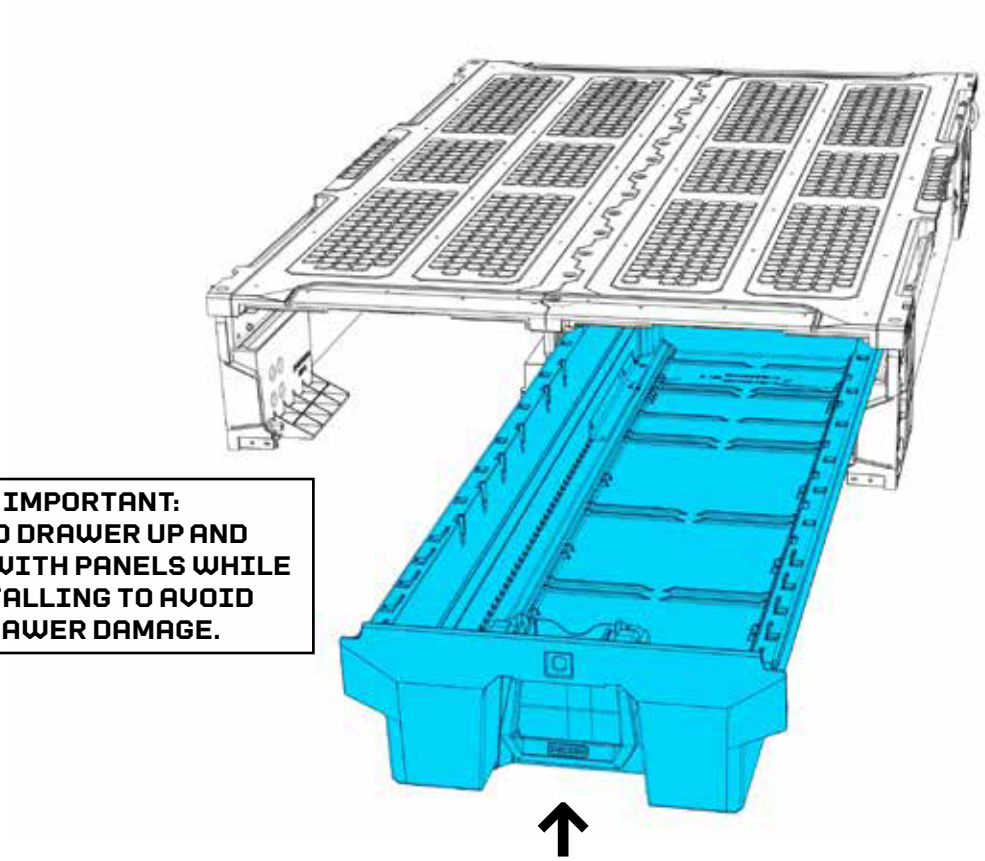

IMPORTANT:
HOLD DRAWER UP AND LEVEL WITH PANELS WHILE INSTALLING TO AVOID DRAWER DAMAGE.

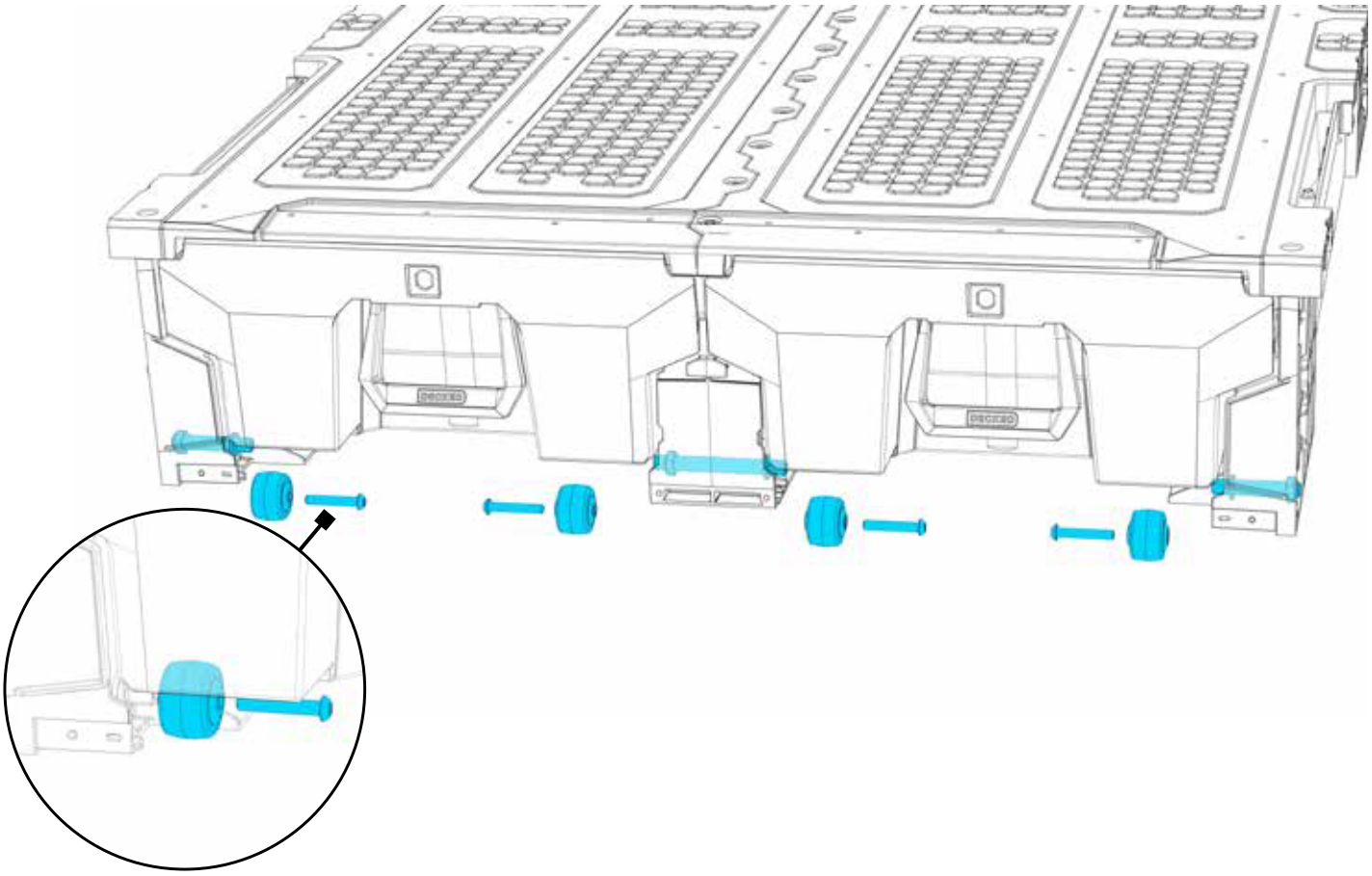

STEP 10:
PUT THE MUSTARD ON THE DOG

1. Install the ruler with four 3/16" hex drive screws. Do not over torque, torque boy. Just get 'em snug.

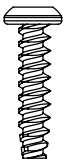
Hex drive

2. Position the torsion brace such that the holes are facing you and the angle is under the center vert and corner feet. The hole-free side should be hidden underneath.

3. Slide the top of the codpiece under the lip on the center vert. Hold the codpiece in place and install two 1" long, 3/8" hex head screws through the codpiece and torsion brace and into the center vert. Do not tighten completely.

Hex head

4. Install the torsion brace ends with the same hex head screws. Do not tighten completely.

5. Once you have the torsion brace where you like it, check to make sure the edge of the feet are plumb vertically, adjust as necessary. Once you are happy go back and tighten completely.

6. Install weatherstrips onto drawer lip. Work from one end to the other, pressing firmly in place. Make sure the point of the weatherstrip is angled towards the cab.

HARDWARE BAG
FS SCREWS

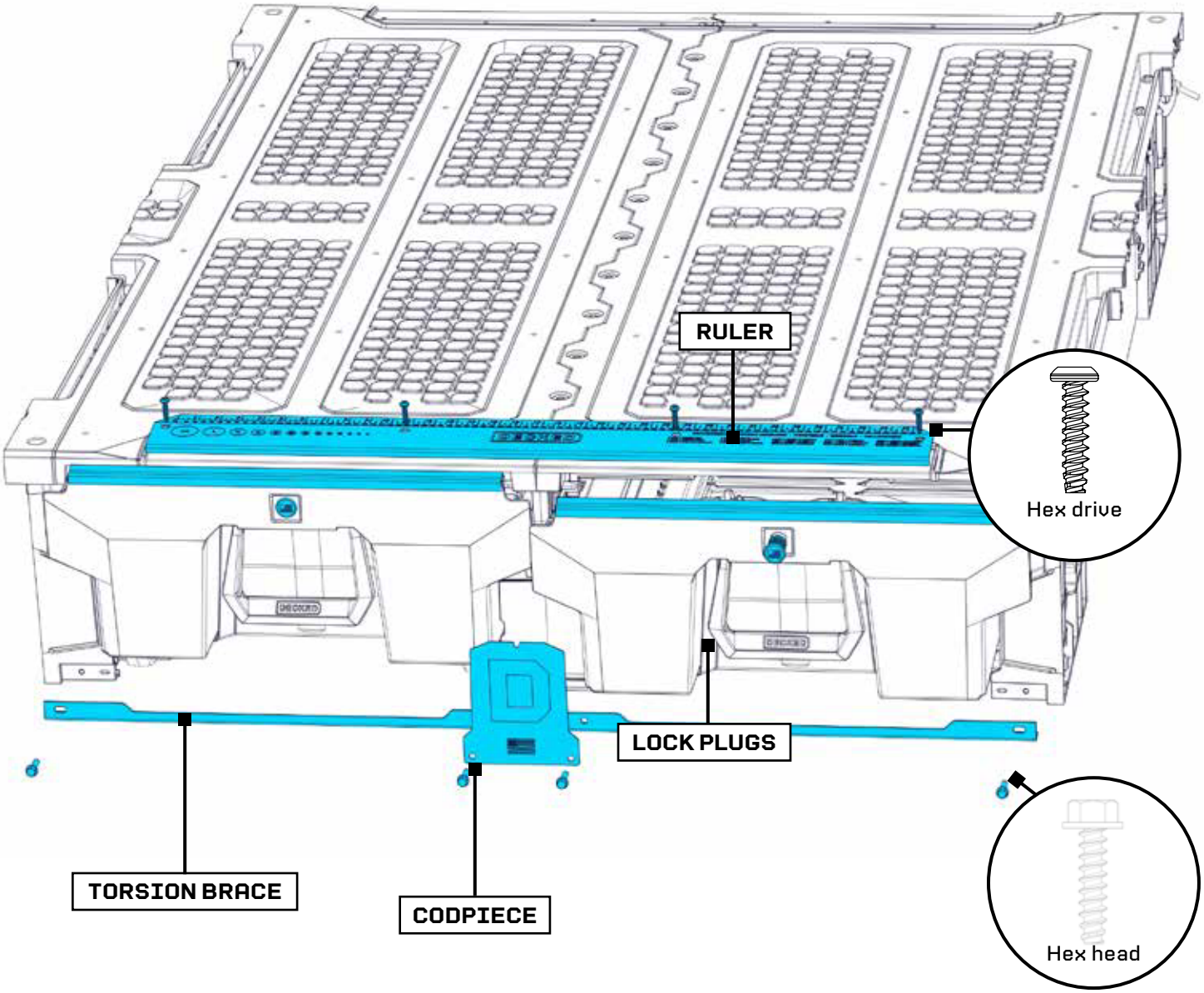

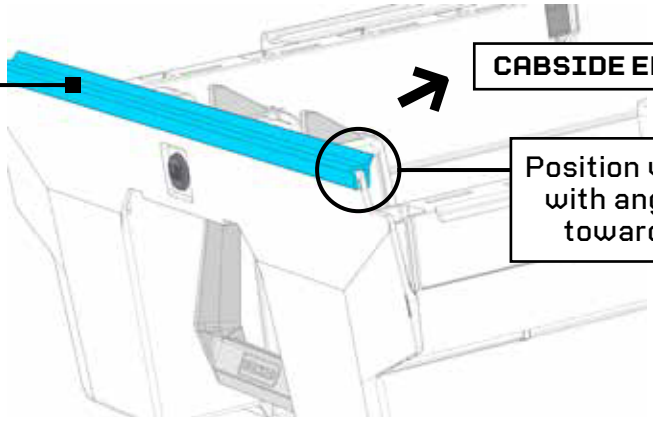

NOTE: Facing the weather stripping the wrong way will funnel water into drawer: bad!

STEP 11:
IT'S INSTALL TIME

1. Center the system between the wheel wells.

2. Install turnbuckles into the four corners of the system. Set turnbuckle jam nuts to their outermost position. Match the lengths of each threaded end in the turnbuckle. Adjust turnbuckles by holding each hook in a hand and then tighten or loosen by rotating the "takeup" without allowing hooks to rotate.

3. Hook one end of the turnbuckle through the DECKED tie down on the side of the support foot. Hook the other end of the turnbuckle through the factory tie down on the floor. Leave all turnbuckles loose.

4. Shift the entire system either towards the rear or front to take up most of the slack in the cables. Make sure there is enough room to close the rear doors.

5. Tighten the turnbuckles by rotating the take up. There is a small "R" stamped on the turnbuckle to help identify which end is "righty tighty lefty loosey". Once you like how the system is centered, tighten completely by hand then take a wrench and tighten one more complete turn of the take up.

6. Tighten jam nuts against the take up firmly.

7. Stand back and say, "YUP" with your hands on your hips.

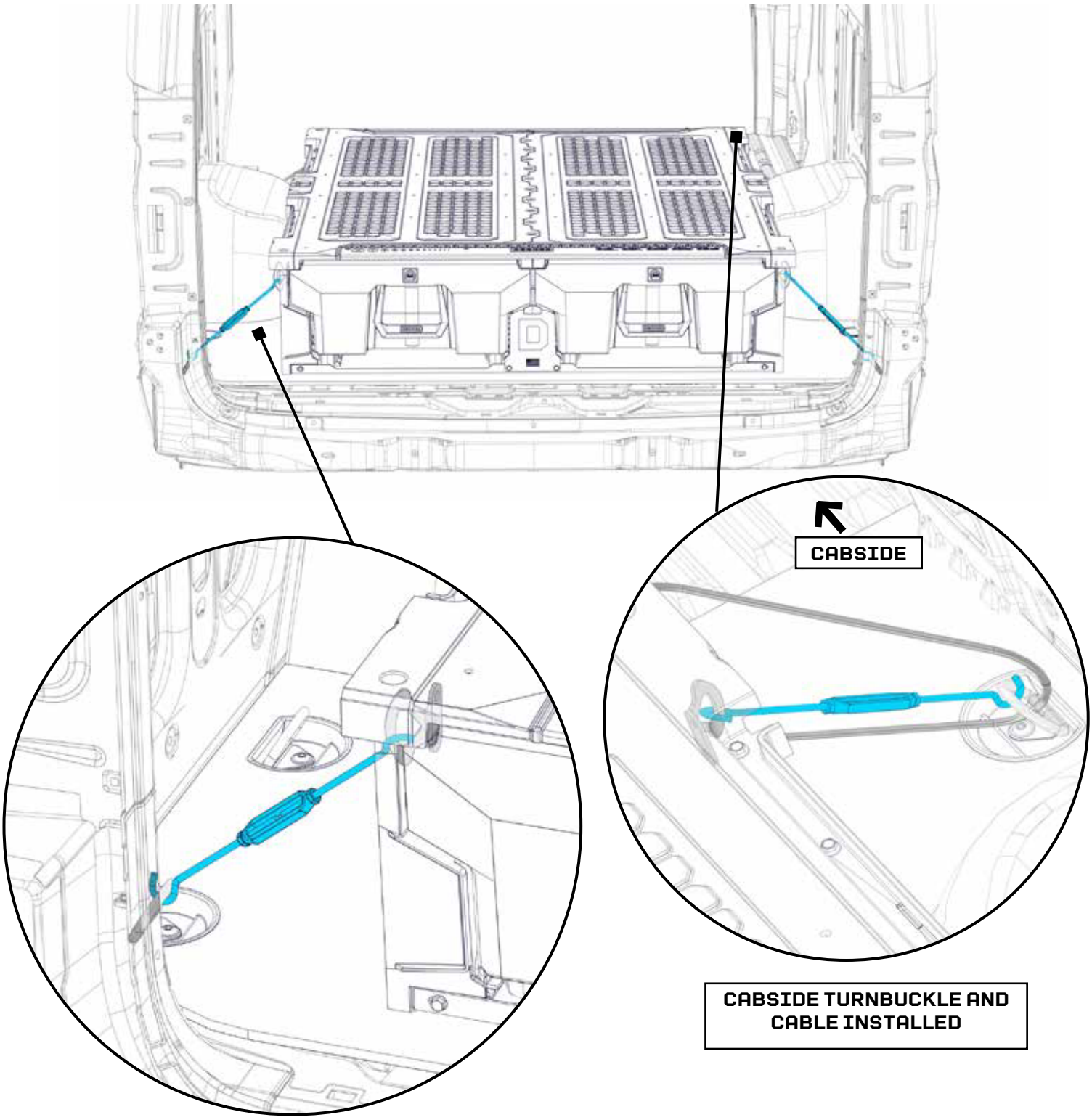

CABSIDE TURNBUCKLE AND CABLE INSTALLED

TAILGATE TURNBUCKLE INSTALLED

STEP 12:
SIDE GUARDS

We've included side guards along with the necessary hardware to complete your install.

Position the side guards on the edges of the panels so that the mounting holes are on the top of the panel and the return faces down (wraps around the panel edge).

Position the side guards such that they do not reside over the embossed "D"s in the panel.

Use a Phillips head screwdriver to install the side guards screws directly into the panels.

Questions? Call us at 208-806-0251

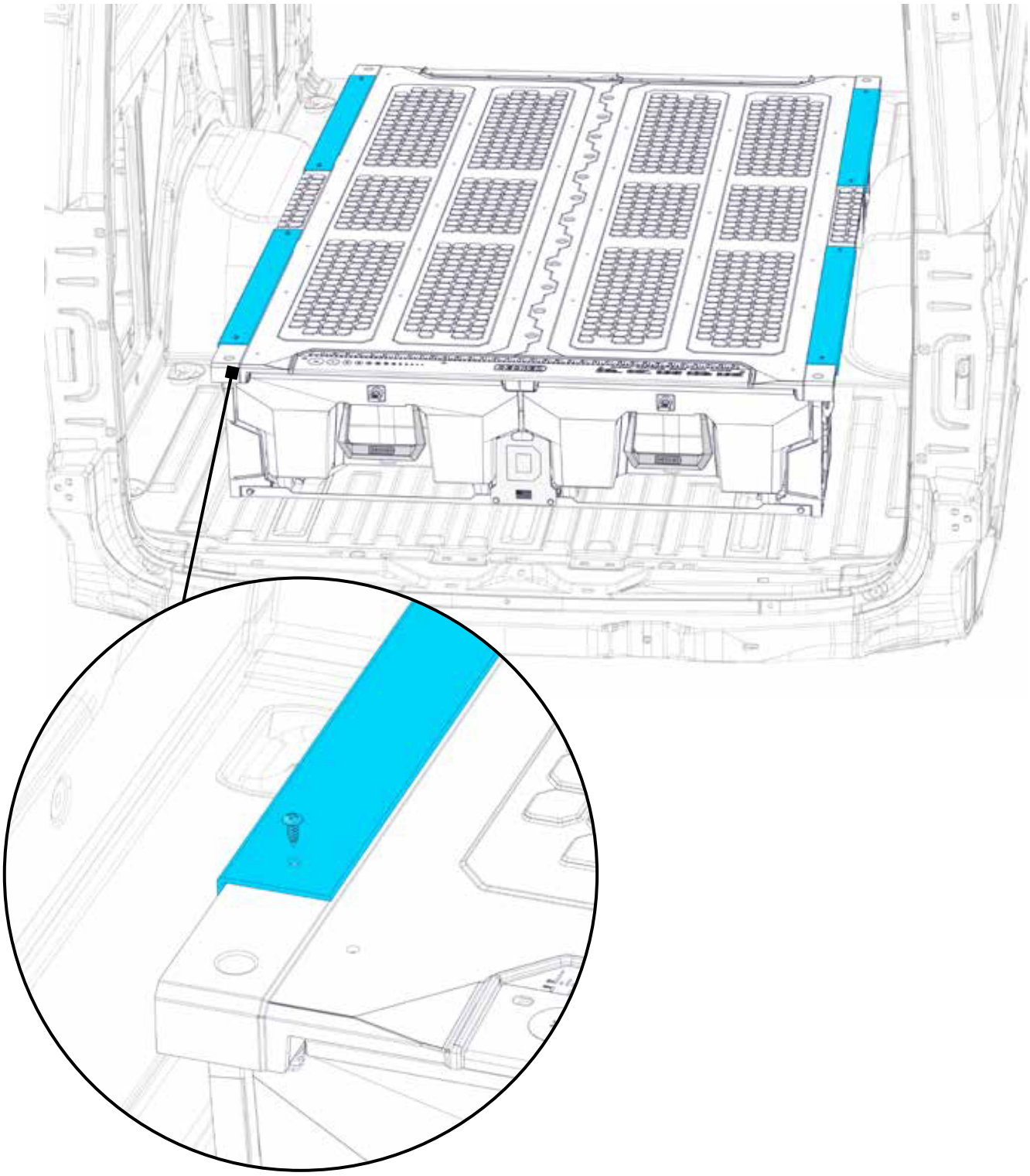

CONGRATS, GAME CHANGER!

YOU DID IT.

Crack open a cold one of your liking, sit back and admire your work. Now get busy organizin'!

DECKED PRODUCTS
LIMITED LIFETIME WARRANTY

(Valid on DECKED Products purchased on or after 8/1/2021)

DECKED LLC, (the "Manufacturer") warrants the original purchaser only that DECKED Truck and Van Products (The "DECKED" Product) will be free from defects in material and workmanship from the date of purchase and continuing for the expected lifetime of the DECKED Product. The DECKED Product must be registered by the original purchaser with DECKED, LLC via its website at, decked.com/register, and a copy of the original sales receipt must be supplied to the Manufacturer at the time a warranty claim is made. This warranty terminates if the original purchaser transfers the DECKED Product to any other person or vehicle.

WHAT IS COVERED
All DECKED Products identified above on or after August 1, 2021. **DECKED's Limited Lifetime Warranty applies to US and Canadian customers only. International shipments are covered by DECKED's 3 Year Limited Warranty.**

WHAT WE WILL DO TO CORRECT PROBLEMS
Subject to the limitations and exclusions described in this limited warranty, the Manufacturer will remedy defects in workmanship or materials by providing one of the following remedies at its option and without charge to the original purchaser for parts: (a) repairing the defective portion of the DECKED Product or (b) replacing the entire DECKED Product. In addition, the Manufacturer may elect at its option not to repair or replace the DECKED Product, but rather issue to the original purchaser a refund equal to the purchase price paid for the DECKED Product or a credit to be used towards the purchase of a new DECKED Product.

WHAT IS NOT COVERED
This limited warranty expressly excludes:

- Damage or defects caused by normal wear and tear, cosmetic rust, scratches, accidents, unlawful vehicle operation, installation in a non-supported vehicle or installed in a vehicle which does not match the DECKED Product's SKU-intended fitment or use, or modification of the product, or any types of repair of a DECKED Product other than those authorized or provided by the Manufacturer.

- Damage or defects resulting from conditions beyond the Manufacturer's control and specifications including, but not limited to modification, misuse, overloading, or failure to assemble, install or use the DECKED Product in accordance with the Manufacturer's written instructions or guidelines included with the DECKED Product or separately made available to the original purchaser.

- Damage to the contents of the DECKED Product or vehicle.

- TO THE EXTENT PERMITTED BY LAW, IN NO EVENT SHALL THE MANUFACTURER BE LIABLE FOR ANY INCIDENTAL, SPECIAL, INDIRECT, OR CONSEQUENTIAL DAMAGES, INCLUDING ECONOMIC LOSS, WHETHER RESULTING FROM NONPERFORMANCE, USE, MISUSE, OR INABILITY TO USE THE DECKED PRODUCT OR THE MANUFACTURER'S NEGLIGENCE.

NO OTHER EXPRESS WARRANTY APPLIES
This Limited Lifetime Warranty is the sole and exclusive warranty for DECKED Products. No employee, agent, dealer, or other person is authorized to alter this warranty or make any other warranty on behalf of DECKED LLC.

NOTIFICATION PROCEDURES
If the DECKED Product does not conform with the terms of this limited warranty, the original purchaser must promptly notify the Manufacturer in writing upon discovery of the nonconformity. In order to receive remedies under this limited warranty, a warranty claim must have been registered with DECKED LLC by the original purchaser, must describe the nature of the products nonconformity, include a copy of the original sales receipt, invoice, or other proof of purchase and be accompanied with photos or video. Repairs or modifications made to the DECKED Product by other than the Manufacturer or its authorized agent will nullify this limited warranty. Coverage under this limited warranty is conditioned at all times upon the owner's compliance with these required registration, notification, and repair procedures.

Product registration may be performed at:
decked.com/register

Warranty claims must include reciprocal contact information and may be made via certified mail or email to:

DECKED Warranty and Claims
PO Box 885
Ketchum, ID 83340
warranty@decked.com
208-806-0251

SCAN TO REGISTER YOUR SYSTEM

Register your system at decked.com/warranty

PATENTS

MIDSIZE DRAWER SYSTEM:
US10988087B2, 112017005448.6, AU2017348386A1, 3042037

FULL SIZE DRAWER SYSTEM:
US9527454-B2, USD719905 S, US9168874 B2, CA2969118A1

TOOL BOX:
US20210062581A1

For more information on our patents visit: decked.com/patents

DECKED